KOHLER®

Iron/Tones® | K-5312

Smart Divide® 33" top-/undermount double-bowl kitchen sink

Features

- 33" (838 mm) minimum base cabinet width for top-mount installation
- 36" (914 mm) minimum base cabinet width for undermount installation
- Double-equal bowls
- 9" (229 mm) depth provides generous workspace
- Smart Divide® feature offers a lower bowl divider that increases workspace versatility



Sustainability

Available Colors/Finishes

Color tiles intended for reference only.

	0	White
	FF	Sea Salt
	96	Biscuit
	NY	Dune
	95	Ice Grey
	7	Black Black
	TRF	Truffle
	17	Teal
	34	Fresh Green
	42	Aspen Green

1-800-4KOHLER (1-800-456-4537)
Kohler Co. reserves the right to make revisions without notice to product specifications.
For the most current specification sheet, go to www.kohler.com USA or www.kohler.ca Canada.
4-15-2026 4:34 - US-CA

THE BOLD LOOK OF KOHLER®

Codes/Standards

ASME A112.19.1/CSA B45.2

Technical Information

All product dimensions are nominal.

Drain Hole Diameter:	3-7/8" (98 mm)
Minimum Base Cabinet Width:	36" (914 mm)
Basin Configuration:	Equal Bowls
Left Basin Length:	30-5/16" (770 mm)
Left Basin Width:	16-1/16" (408 mm)
Left Basin Depth:	9" (229 mm)
Right Basin Length:	17-7/16" (442 mm)
Right Basin Width:	17-1/16" (433 mm)
Right Basin Depth:	9" (229 mm)

Material

- KOHLER® enameled cast iron

Recommended Products/Accessories

1411886 Undermount Kit 23"

K-23726 Drain treatment

K-23725 Cast iron cleaner

K-8801 Sink drain and strainer with tailpiece

K-8799 Sink drain and strainer basket, less tailpiece

Warranty

See website for detailed warranty information.

KOHLER® Enameled Cast Iron Kitchen and Bathroom Sink Lifetime Limited Warranty

1-800-4KOHLER (1-800-456-4537)
Kohler Co. reserves the right to make revisions without notice to product specifications.
For the most current specification sheet, go to www.kohler.com USA or www.kohler.ca Canada.
4-15-2026 4:34 - US-CA

THE BOLD LOOK OF KOHLER®

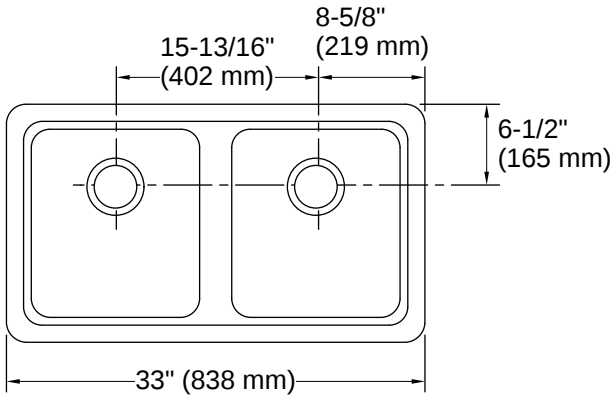

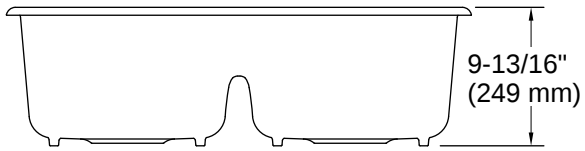

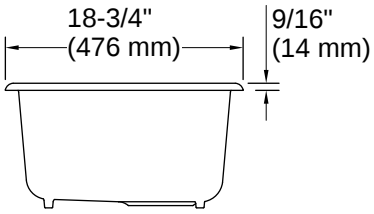

Installation

- Top-mount or undermount

Installation Notes

Install this product according to the installation instructions.

Countertop manufacturer or cutter must use the cut-out template provided with the product, or a current one provided by Kohler Co. (call 1-800-43-FOCUS). Kohler Co. is not responsible for cut-out errors when the incorrect cut-out template is used.

1-800-4KOHLER (1-800-456-4537)
Kohler Co. reserves the right to make revisions without notice to product specifications.
For the most current specification sheet, go to www.kohler.com USA or www.kohler.ca Canada.
4-15-2026 4:34 - US-CA

THE BOLD LOOK OF KOHLER.