Gerster Equipment Company

3-5T Foundation

November 16, 2017

Foundation™
Light Commercial Rooftop Unit

Agenda

- Product Positioning
- General Information
- Regulatory Updates
- Product Details

Market Dynamics – 3-25 Tons

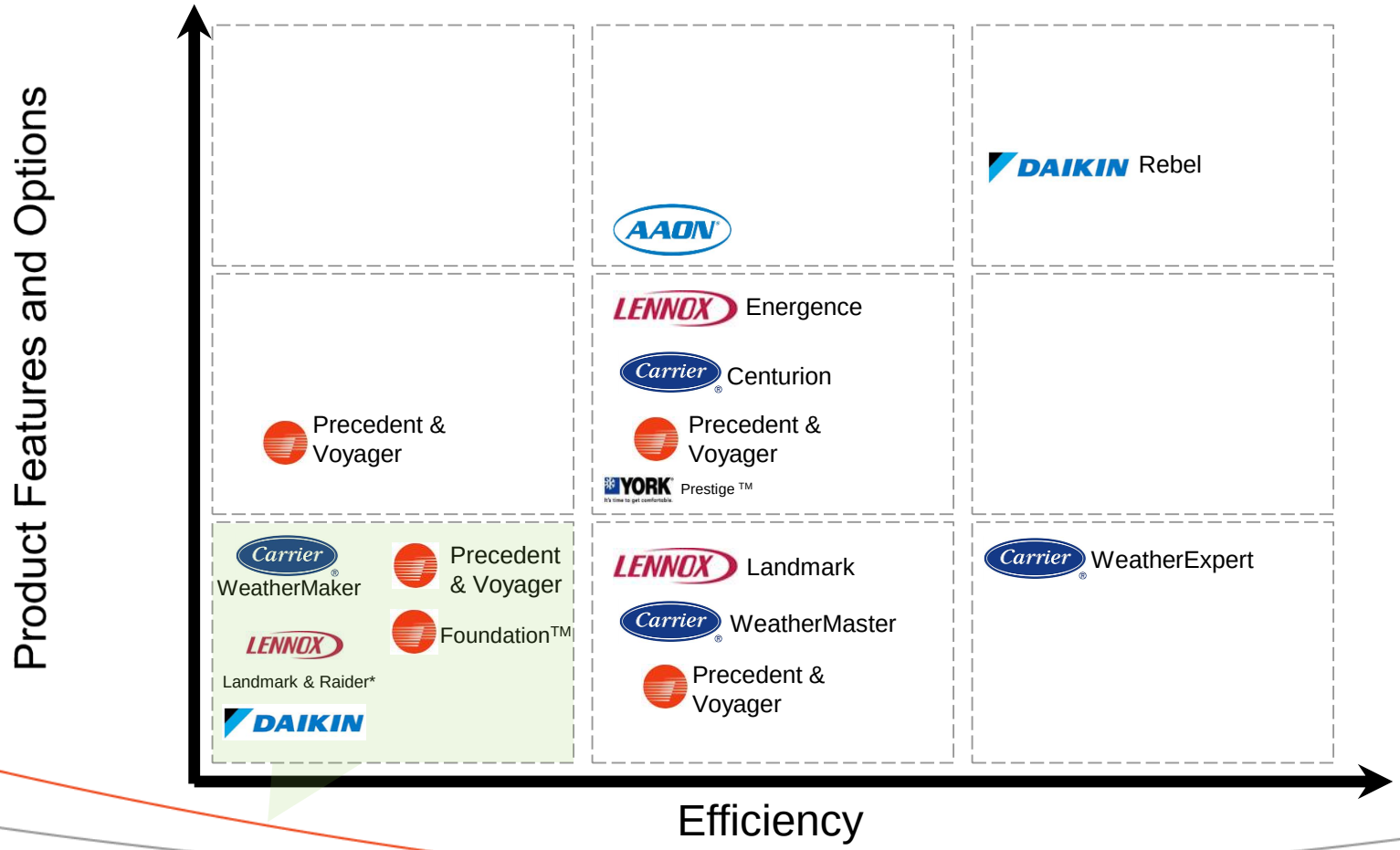

Agenda

- Product Positioning
- General Information
- Regulatory Updates
- Product Details

Foundation™ Light Commercial Rooftop Unit

- **3-5 Ton Units**
  - Available now in WebTOPPS
  - First Shipment Began Late 1st Q
  - Cooling Only w/ Optional Electric Heat
  - Gas Heat – Medium is Two-Stage
- 14 SEER/12 EER
- Voltages: 208/230 VAC, 460 VAC, 3-Phase only
- Convertible Airflow
- Fits common roof curb used on existing buildings allowing you the option to now use Trane in more replacement opportunities.

Foundation™ Light Commercial Rooftop Unit

- **3-5 Ton Units**
  - Colored/Numbered wiring
  - Phase Monitor Standard
  - Microchannel coils (Evap/Cond)
  - 5 YR Compressor / Heat Exchanger
  - 1 YR Parts
- No crankcase heater standard

  (unlike the Precedent/Voyager models now)

Product Highlights – Unit Cabinetry

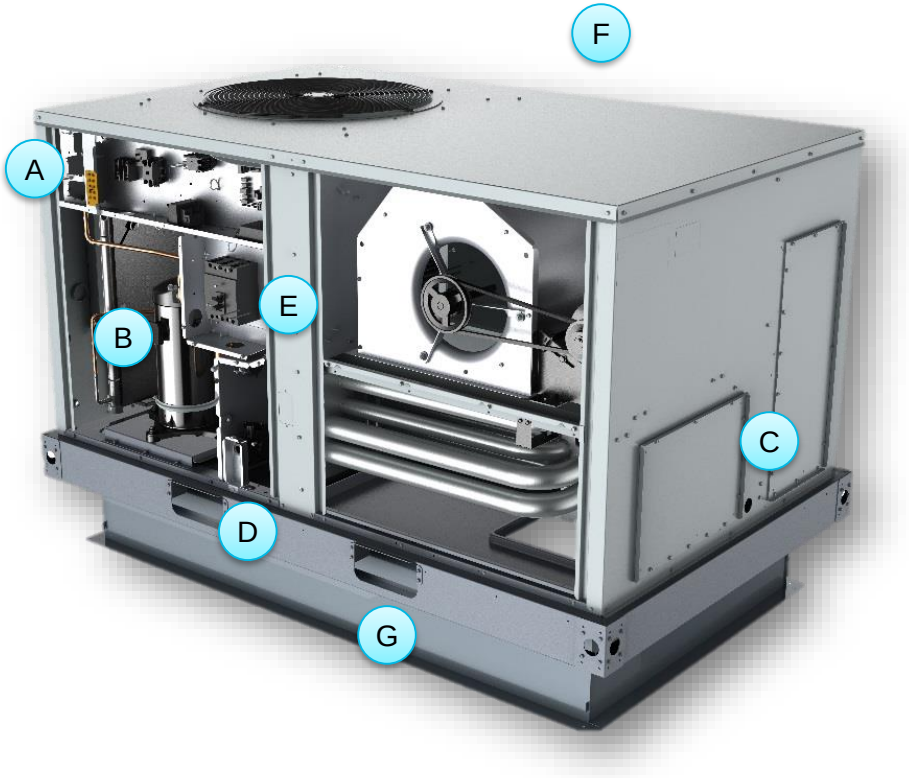

- **A** Electromechanical controls
- **B** Single Side Service Access
- **C** Convertible Design *(no kit required)*
- **D** Through-the-Base Utility Provision (Factory & Field)
- **E** Optional Non-Fused Disconnect
- **F** One Piece Top Cover
- **G** 3 Sided Fork Access

Product Highlights – Heat Exchanger

- Compact, Tubular Design
  - Based on Impack Heat Exchanger
  - Proven Reliability
- Direct Spark Ignition (same board used on current Impack unit)
- 2 Heat Sizes
  - Low & Medium
  - 1 Stage (low), 2 Stage (med)
- Stainless Steel Option

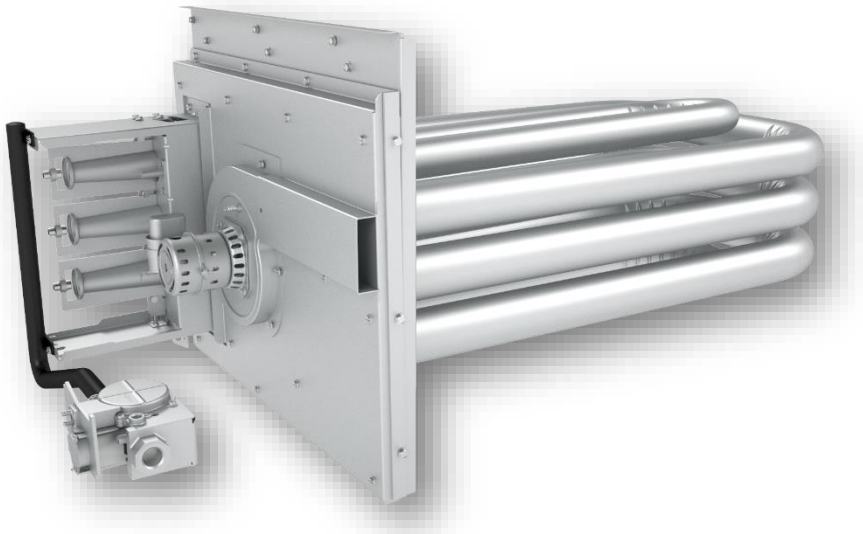

Tons	Low Capacity (Input/Output)	Medium Capacity (Input/Output)
3	72,000 / 57,600	100,000 / 80,000 80,000 / 64,000
4	72,000 / 57,600	115,000 / 92,000 92,000 / 73,600
5	72,000 / 57,600	115,000 / 92,000 92,000 / 73,600

Product Highlights – Other Areas

- Control Box
  - Electromechanical controls
  - Separation of high and low voltage components
  - Emergency Stop Integration
  - Low Voltage Terminal Strip
  - Phase Monitor Standard
- Refrigeration System
  - Microchannel Cond & Evap Coil
  - Single Stage
  - TXV Metering Device
- Indoor Fan Subsystem
  - Belt-drive
  - Oversized motor option

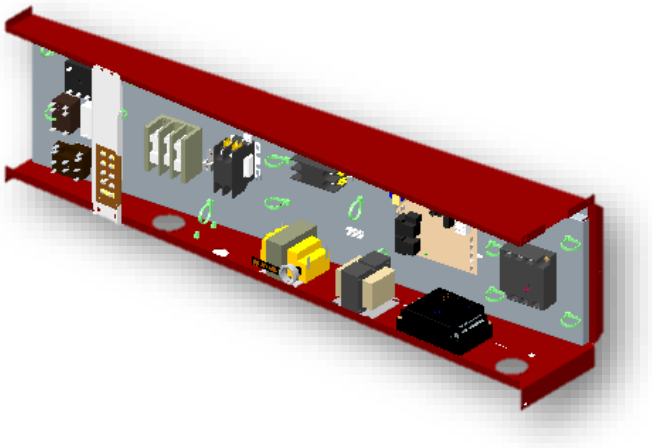

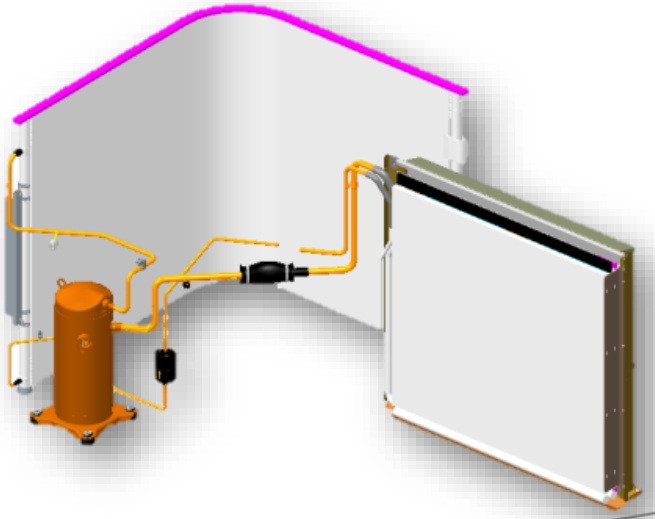

Product Highlights – Footprint

- Single footprint for 3-5 tons
- Most commonly found replacement footprint
  - Select Carrier units dating to 1980's
- Reduce Job Cost
  - No Adapter Curb!!!
  - Minimal Setup

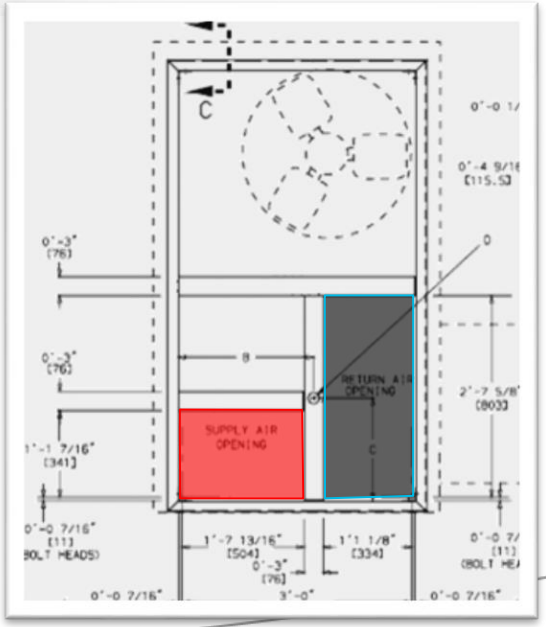

Product Highlights – Footprint Foundation 3-5 Tons

Replaces common Carrier units dating back to the mid-1980's as well as other manufacturers' units

Carrier

Gas Heat Units	
48DJ 004-006	48LC 004-006
48GJ 006	48LJ 004-006
48HC 004-006	48TC 004-006
48HE 004-006	48TF 004-006
48HJ 004-006	48TJ 004-006
48KC 004-006	48TM 004-006

Cooling Only / Electric Heat Units	
50GJ 006	50LJ 004-006
50HC 004-006	50TC 004-006
50HE 004-006	50TFF 004-006
50HJ 004-006	50TJ 004-006
50KC 004-006	50TM 004-006
50LC 004-006	

Bryant

Gas Heat Units	
579A 036-060	580J 04-06
580C 036-060	581C 036-060
580D 036-060	581J 04-06
580F 036-060	

Cooling Only / Electric Heat Units	
551B 036-060	558F 036-060
558C 036-060	558J 04-06
558D 036-060	

- 3-5 Ton Foundation units do not match the Precedent™ Footprint
- See HUB solution for full quick reference matrix and other sales tools

Product Highlights – Footprint Focus - 15-25 Ton Units

- Consistent Footprint
- Replace Multiple Brands
  - Select Voyager 2
  - Select Carrier Units
- Reduce Job Cost
  - No Adapter Curb!!!
  - Minimal Setup
- How does it work?
  - Next Slide…

Product Highlights – Footprint Focus (continued) - 15-25 Ton

- Product ships with return opening in Trane replacement configuration

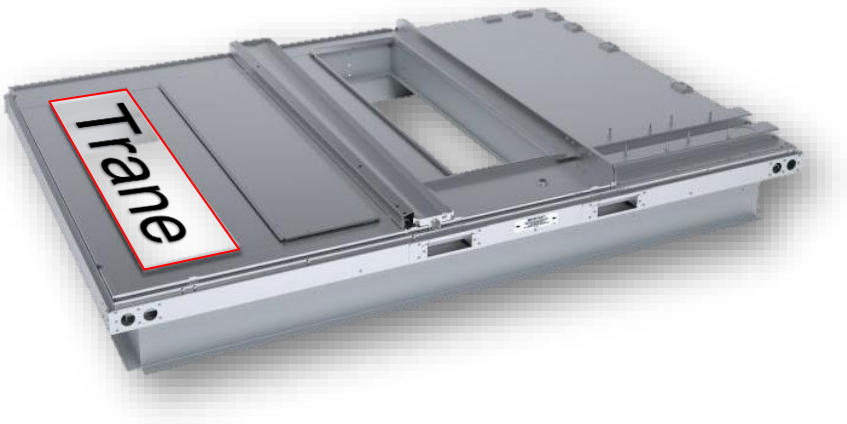

- For conversion, swap return opening duct cover

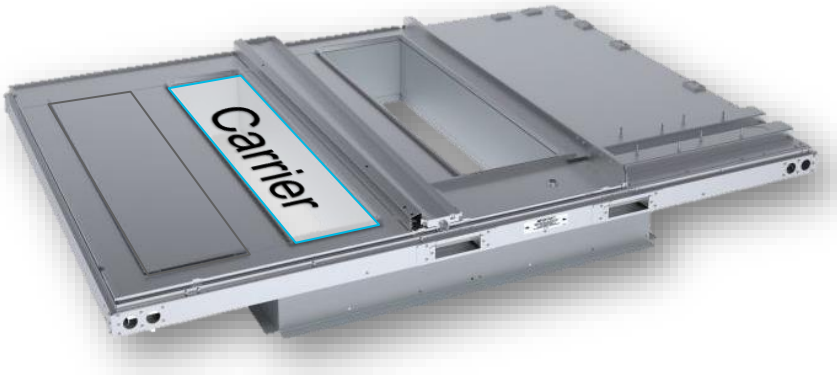

Product Highlights – Footprint Quick Reference Matrix 15-25 Ton Units

Gas Heat

	Foundation		Voyager		Carrier	
Tons	Model No.	Net Wt. (lbs)	Model No.	Net Wt. (lbs)	Model No.	Net Wt. (lbs)
15	GAC180A	1864	YCD180E	2015	48TJD016	1650
	GAD180A		YCD180F	1925	48TJE016	1670
			YSD180F	1925	48TJF016	1650
			YHD180F	2129	48HJD017	1950
			YCD181B	1994	48HJF017	1950
			YCD181C	2005	48TMD016	1800
			YCD181E	2129	48TMF016	1800
			YCD181F	2129	48DP016	1650
					48DR016	1670
17.5	GAC210A	1918	YCD210A	1870	48TJD020	1980
	GAD210A		YCD210B	1870	48TJF020	1800
			YCD210E	2113	48TMD020	1850
			YCD210F	2007	48TMF020	1850
			YSD210F	2007	48DP020	2230
			YHD210F	2201		
			YCD211B	2021		
			YCD211C	2088		
			YCD211E	2201		
			YCD211F	2201		
20	GAC240A	2007	YCD240A	1995	48TJD024	1980
	GAD240A		YCD240B	1995	48TJE024	2161
			YCD240E	2116	48TJF024	1850
			YCD240F	2069	48TMD025	1900
			YSD240F	2069	48TMF025	1900
			YHD240F	2203		
			YCD241B	2102		
			YCD241C	2186		
			YCD241E	2203		
			YCD241F	2203		
25	GAC300A	2058	YCD300B	2082	48TJD028	2364
	GAD300A		YCD300E	2124	48TJE028	2543
			YCD300F	2054	48TJF028	2000
			YSD300F	2054	48TMD028	2270
			YHD300F	2207	48TMF028	2270
			YCD301C	2191		
			YCD301E	2207		
			YCD301F	2207		

Cooling Only

	Foundation		Voyager		Carrier	
Tons	Model No.	Net Wt. (lbs)	Model No.	Net Wt. (lbs)	Model No.	Net Wt. (lbs)
15	EAC180A	1700	TCD180E	1912	50TJ016	1564
			TCD180F	1822	50TM016	1650
			TSD180F	1822	50DP016	1515
			THD180F	1984	50HJ017	1800
			TCD181B	1819		
			TCD181C	1902		
			TCD181E	1984		
			TCD181F	1984		
17.5	EAC210A	1755	TCD210A	1695	50DP020	2110
			TCD210B	1695	50TJ020	1860
			TCD210E	1969	50TM020	1710
			TCD210F	1863		
			TSD210F	1863		
			THD210F	2051		
			TCD211B	1846		
			TCD211C	1921		
			TCD211E	2051		
			TCD211F	2051		
20	EAC240A	1844	TCD240A	1820	50TJ024	1860
			TCD240B	1913	50TM025	1770
			TCD240E	1972		
			TCD240F	1925		
			TSD240F	1925		
			THD240F	2053		
			TCD241B	1926		
			TCD241C	2031		
			TCD241E	2053		
			TCD241F	2053		
25	EAC300A	1888	TCD300B	1906	50TJ028	2244
			TCD300E	1948	50TM028	2120
			TCD300F	1878		
			TSD300F	1878		
			THD300F	2027		
			TCD301C	2016		
			TCD301E	2027		
			TCD301F	2027		

Agenda

- Product Positioning
- General Information
- Regulatory Updates
- Product Details

Regulatory Compliance

2017 Changes:

- Department of Energy mandated transition from 13 SEER to 14 SEER for all 3 phase packaged equipment.
- New CA Title 24 compliance requirements:
  - FDD alarm enunciation in the space – *Foundation FDD capable of providing this feature!*
  - “Smart” Thermostats – *Will be available soon to meet the demand load shedding requirements!*

2018 DOE Minimum Efficiency

- DOE is changing <u>from</u> EER <u>to</u> IEER
  - Applies to 6T and above
  - New Mins apply to **<u>Manufacturer Build Date</u>**
  - Units Built after Dec 31, 2017 must meet
  - Existing Inventory of pre-2018 equipment can be sold anytime, anywhere

2018 DOE MINIMUMS

Tons	Cooling	Gas	Heat Pump
6	12.9 IEER	12.7 IEER	12.2 IEER
7.5	12.9 IEER	12.7 IEER	12.2 IEER
8.5	12.9 IEER	12.7 IEER	12.2 IEER
10	12.9 IEER	12.7 IEER	12.2 IEER
12.5	12.4 IEER	12.2 IEER	11.6 IEER
15	12.4 IEER	12.2 IEER	11.6 IEER
17.5	12.4 IEER	12.2 IEER	11.6 IEER
20	11.6 IEER	11.4 IEER	10.6 IEER
25	11.6 IEER	11.4 IEER	10.6 IEER

2018 Packaged Product Compliance Paths

- Precedent
  - 072, 092, 120 “F” SE models meet
  - 090 and 102 “F” SE model inventory
  - 102 “F” HE model meets
- Voyager
  - “G” Models meet
- Foundation
  - “A” Efficiency Model Inventory
  - All 2-speed fan models meet

Timing (Last Order Dates; See Charts):

- Precedent – Dec 8th on configured T/YSC090 and T/YSC102 models
- Large Foundation – Dec 8th on configured models

Precedent 6-10 Tons	DOE 2018 Compliance	Additional Compliance Path(s)
TSC072 / YSC072	All Models	N/A
WSC072	All Models	N/A
TSC090 / YSC090	**Inventory Built Prior to 1/1/2018**	**TSC092 / YSC092 Models**
WSC090	All Models	N/A
TSC092 / YSC092	All Models	N/A
TSC102 / YSC102	**Inventory Built Prior to 1/1/2018**	*** THC102 / YHC102 Models**
TSC120 / YSC120	All Models	N/A
WSC120	All Models	N/A

Voyager 2 12.5-25 Tons	DOE 2018 Compliance	Additional Compliance Path(s)
TS*150 / YS*150	All Models	None Required
WS*150	All Models	None Required
TS*180 / YS*180	All Models	None Required
WS*180	All Models	None Required
TS*210 / YS*210	All Models	None Required
WS*210	All Models	None Required
TS*240 / YS*240	All Models	None Required
WS*240	All Models	None Required
TS*300 / YS*300	All Models	None Required

Foundation 15-25 Tons	DOE 2018 Compliance	Additional Compliance Path(s)
EAC / GAC/ GAD 180	**Inventory Built Prior to 1/1/2018**	**2 Speed Fan Option (Digit 15=7)**
EAC / GAC/ GAD 210	**Inventory Built Prior to 1/1/2018**	**2 Speed Fan Option (Digit 15=7)**
EAC / GAC/ GAD 240	**Inventory Built Prior to 1/1/2018**	**2 Speed Fan Option (Digit 15=7)**
EAC / GAC/ GAD 300	**Inventory Built Prior to 1/1/2018**	**2 Speed Fan Option (Digit 15=7)**

* Additional optimized products will be launched in 2018

2018 Split Product Compliance Paths

- Odyssey
  - Inventory on 120H, 180J, 240H
  - All Others Meet
  - Can Match with 2-speed TWE A/H's

Timing (Last Order Dates; See Charts):

- Odyssey – Dec 8th on some configured

Odyssey 6-25 Tons	DOE 2018 Compliance	Additional Compliance Path(s)
TTA073G	All Models	N/A
TTA073H	All Models	N/A
TTA090G	All Models	N/A
TTA090H	All Models	N/A
TTA120G	All Models	N/A
TTA120H	Inventory Built Prior to 1/1/2018	Select w/ 2 Speed TWE unit (Digits 9,10 = 03)
TTA120J	All Models	N/A
TTA150H	All Models	N/A
TTA180H	All Models	N/A
TTA180J	Inventory Built Prior to 1/1/2018	Select w/ 2 Speed TWE unit (Digits 9,10 = 03)
TTA240H	Inventory Built Prior to 1/1/2018	Select w/ 2 Speed TWE unit (Digits 9,10 = 03)
TTA240J	All Models	N/A
TTA300J	All Models	N/A
TWA073D	All Models	N/A
TWA073E	All Models	N/A
TWA090D	All Models	N/A
TWA090E	All Models	N/A
TWA120D	All Models	N/A
TWA120E	All Models	N/A
TWA180E	All Models	N/A
TWA240E	All Models	N/A

* Additional optimized products will be launched in 2018

Agenda

- Product Positioning
- General Information
- Competitive Summary
- Regulatory Updates
- Product Details

Model Number Description
Digits 1 - 6

GBC036A3EMA**0000000000000000000000000

Digit 1 - Unit Type

G = Gas Heat
E = Electric Heat

Digit 2 - Efficiency

B = Generation B

Digit 3 - Airflow Configuration

C = Convertible

Digit 4-6 - Unit Tonnages

036 = 3 Tons
048 = 4 Tons
060 = 5 Tons

Notes:

- Digit 1 – Two unit types, no heat pump units yet
- Digit 2 – “Efficiency” generation – allows for better tracking of efficiency by model number.
- Digit 3 – All 3-5 ton units convertible (no kit required)

Model Number Description
Digits 7 - 13

GBC036A3EMA**0000000000000000000000000000

Digit 7 – Major Design Sequence

Does not denote product options

Digit 8 – Unit Voltage

3 = 208/230 VAC - 3 Phase
4 = 460 VAC – 3 Phase
W = 575 VAC – 3 Phase
K = 380 VAC – 3 Phase

Digit 9 – Unit Controls

E = Electromechanical

Digit 10 – Heat Options (Gas Heat)

L = Low Heat (X = Stainless Steel)
M = Medium Heat (Y = Stainless Steel)

Digit 10 – Electric Heat

0 = No Heat	D = 15 kW
A = 5 kW	E = 20 kW
B = 7.5 kW	F = 25 kW
C = 10 kW	

Digit 11 – Minor Design Sequence

Does not denote product options

Digit 12-13 – Service Digits

Does not denote product options

Notes:

- Digit 9 – Only electromechanical controls

Field Installed Accessories
Economizers

Accessory	Description
BAYECON320A	Dry Bulb Economizer – Downflow / Horizontal
BAYENTH320A	Reference Enthalpy Kit
BAYENTH321A	Comparative Enthalpy Kit
BAYECON353A	Low Leak Economizer - Downflow
BAYECON354A	Low Leal Economizer - Horizontal
BAYBARO321A	Low Leak Barometric Relief Damper
BAYENTH322A	Reference Enthalpy Economizer (LLE)
BAYENTH323A	Comparative Enthalpy Economizer (LLE)

Notes:

- Standard economizer kit used for horizontal and downflow applications (shipped from factory in the downflow configuration)
- Enthalpy – can be field or factory installed

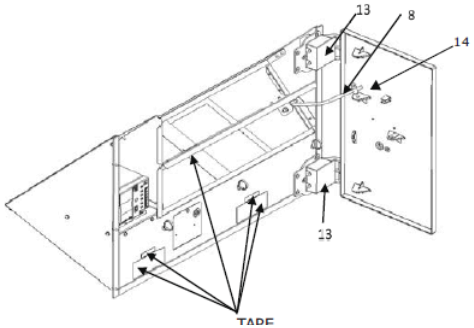

Horizontal Configuration

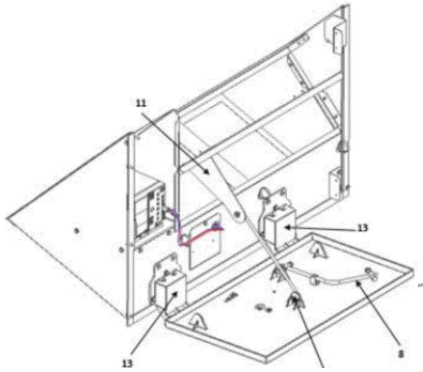

Downflow Configuration

Field Installed Accessories

Other Fresh Air Accessories

Accessory	Description
BAYDMPR320A	Motorized Damper
BAYDMPR321A	Manual Damper
BAYBARO320A	Barometric relief
BAYPWRX320A BAYPWRX321A BAYPWRX322A	Power Exhaust, available for 208/230, 460, & 575 volt applications

Notes:

- Power Exhaust installs on the horizontal return opening

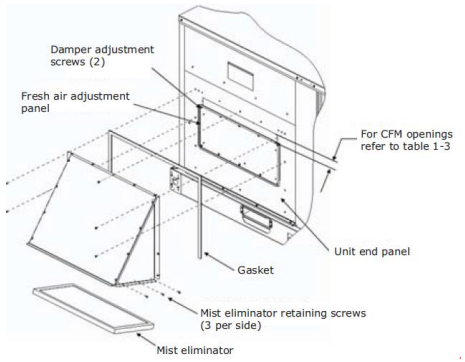

Manual Damper

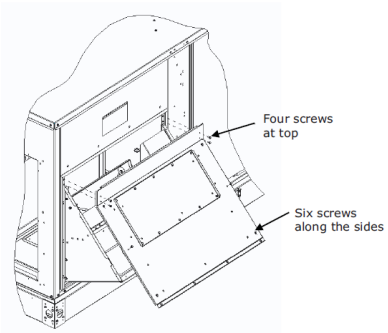

Motorized Damper

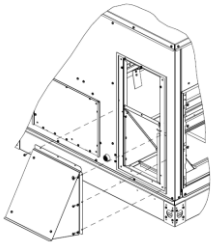

Barometric Relief

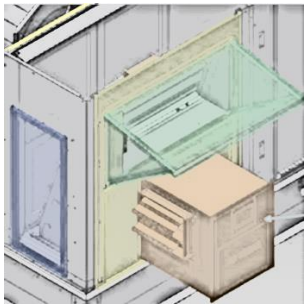

Power Exhaust

Field Installed Accessories
Through the Base Options

Accessory	Description
BAYTBUE320A	Field installed through the base electric
BAYTBGF320A	Field installed through the base gas utility connections
BAYDSCF320A BAYDSCF321A	Field installed unit mounted disconnect. This accessory includes parts needed for through the base electrical connections

Notes:

- Increased flexibility with “stock” product

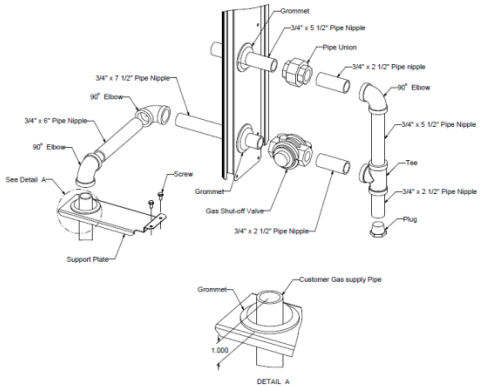

Through the base gas utility connections

Field Installed Accessories

External Accessories

Accessory	Description
BAYCURB320A	Roof curb
BAYGARD320A	Condenser Hail Guard
BAYLOAM340A	Low Ambient Cooling Kit – Condenser Fan Cycling Kit

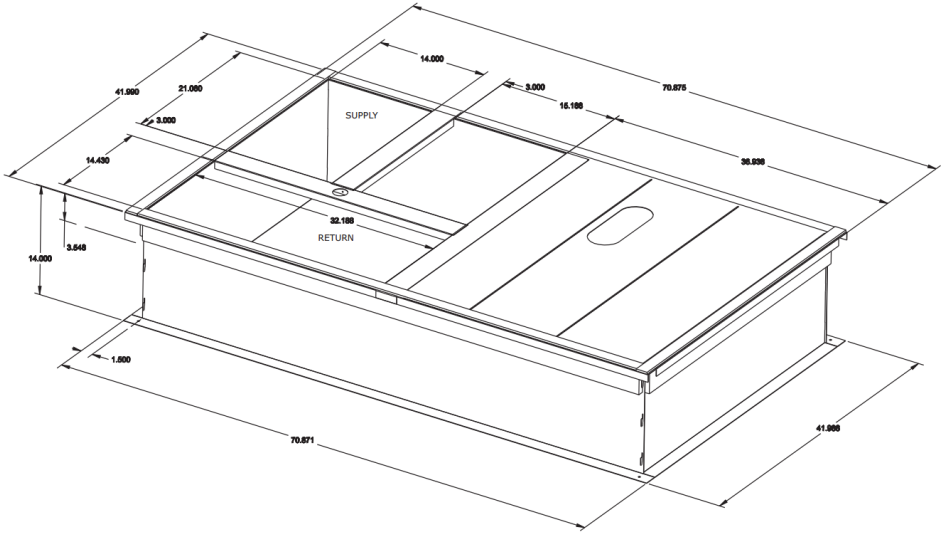

Roof Curb

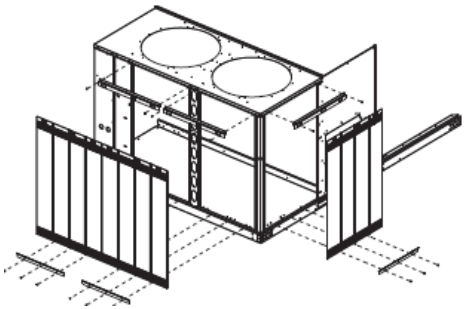

Condenser Hail Guards

Field Installed Accessories

Other Accessories

Accessory	Description
BAYCCHT010B BAYCCHT011B BAYCCHT103A BAYCCHT405A	Crankcase heaters
BAYHSMT320A BAYHSMT321A BAYHSMT322A	Oversized Motors
BAYASCT001	Compressor anti short cycle timer (when T-stat does not provide this functionallity)
BAYCO2K300A	Demand Control Ventilation – Wall Mount CO_2 Sensor
BAYCO2K301A	Demand Control Ventilation – Duct Mount CO_2 Sensor
BAYCOSW320A	Condensate Drain Overflow Switch
BAYLOAM330A	Evaporator Defrost Control (Frostat)

Options Available - Comparison

	Precedent™	Voyager™	Foundation™
Electric Heat	✓	✓	✓
SS Heat Exchanger	✓	✓	✓
Economizers	✓	✓	✓
Oversized Motors	✓	✓	✓
Low Static Kits	✓	✓	✓*
High Static Kits	✓	✓	✓*
Two Speed Fan	✓	✓	✓*
Single Zone VAV	✓	✓	
Multi-Space VAV	✓	✓	
Hinged Access	✓	✓	
MERV 7 Filters	✓	✓	
MERV 13 Filters	✓	✓	
Through-The-Base Utilities	✓	✓	✓
Unit Mounted Disconnect	✓	✓	✓
Unit Mounted Circuit Breaker	✓	✓	
Unpowered Convenience Outlet	✓	✓	
Powered Convenience Outlet	✓	✓	
Low Ambient Cooling	✓	✓	✓

	Precedent™	Voyager™	Foundation™
Hail Guards	✓	✓	✓
BAS Capabilities	✓	✓	!
Hot Gas Reheat (Dehumidification)	✓	✓	
Smoke Detectors	✓	✓	
Clogged Filter Switch	✓	✓	
Fan Fail Switch	✓	✓	
Discharge Air Temperature Switch	✓	✓	
Condensate Overflow Switch	✓	✓	✓
Demand Control Ventilation	✓	✓	✓
Stainless Steel Drain Pan	✓	✓	
Human Interface	✓	✓	
Zone Sensors	✓	✓	
Thermostats	✓	✓	✓
Power Exhaust	✓	✓	✓
LP Conversion Kits	✓	✓	✓
High Altitude Kits	✓	✓	✓
Evaporator Defrost Control	✓	✓	✓

* Available only in 15-25 ton Foundation units

In Closing…

- ***BIG*** growth opportunity in LCU rooftops
  - Leverage footprint…aggressively target Carrier replacement opportunities

- Great addition to the light commercial rooftop portfolio

Questions?