FAIRMONT designs.

Shaker Americana

www.fairmontdesigns.com

1512-V3618
36x18" Vanity

SPECIFICATION SHEET

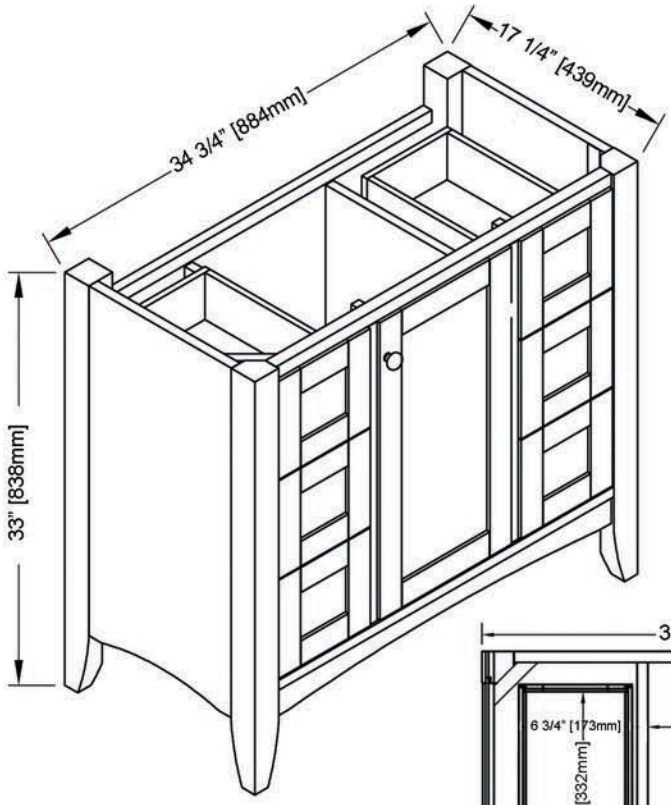

Features

Materials: Poplar solids with Cherry veneers
Door: 1 (right)
Hinges: Fully concealed, Soft closing
Drawer: 6
Drawer Box: 1/2" Solid Pine, English dovetail
Hardware: Brushed Nickel
Back panel: Fully covered
Side panels: 5/8" MDF with Cherry veneers

Colors / Finish

1512-Polar White

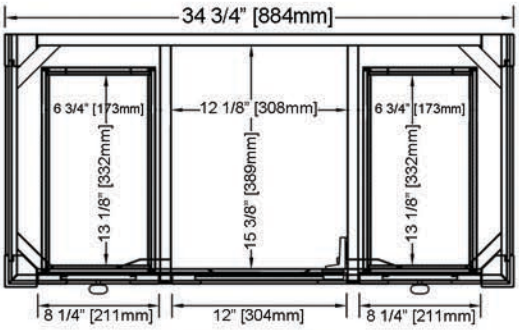

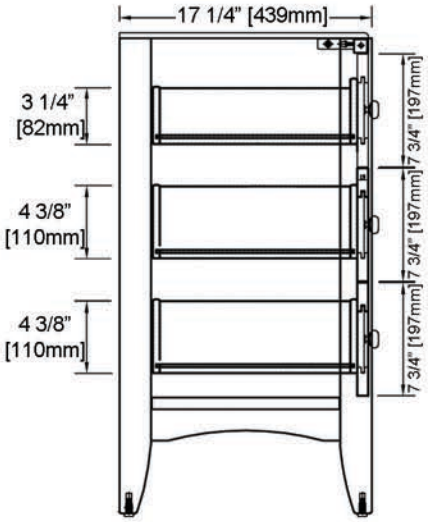

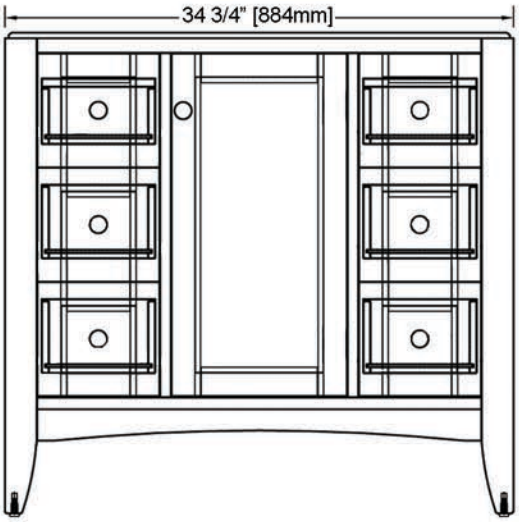

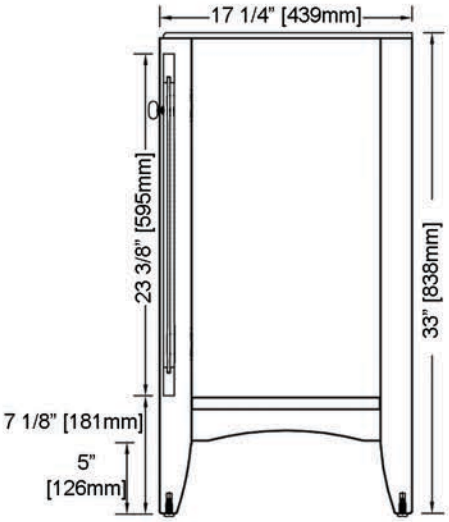

12/01/17