American Standard

BARRIER FREE

CADET® 3 RIGHT HEIGHT® ROUND FRONT TOILET

VITREOUS CHINA

CADET® 3 RIGHT HEIGHT® ROUND FRONT TOILET

❑ **270BA.101**
- Features the **Cadet® Flushing System**
- Vitreous china
- High Efficiency Toilet (HET), ultra-low consumption (4.8 Lpf/1.28 gpf) utilizes 20% less water
- PowerWash® rim scrubs bowl with each flush
- Includes color match bowl caps
- EverClean® surface included
- 3" flush valve
- 2-1/8" trapway
- 16-1/2" rim height for accessible applications
- 12" (305mm) rough-in
- Generous 9" x 8" water surface area
- Chrome finish trip lever is supplied
- 1,000g MaP Score** at 1.28 gpf
- 5 year warranty

❑ **3717B.001** Right Height® Round Front Bowl
❑ **4021.101N** Tank

Nominal Dimensions:
717 x 441 x 770mm (28-1/4" x 17-3/8" x 30-1/4")

Fixture only, seat and supply sold separately

Compliance Certifications - Meets or Exceeds the Following Specifications:
- ASME A112.19.2-2008/CSA B45.1-08 for Vitreous China Fixtures
- US EPA WaterSense® Specification for HETs

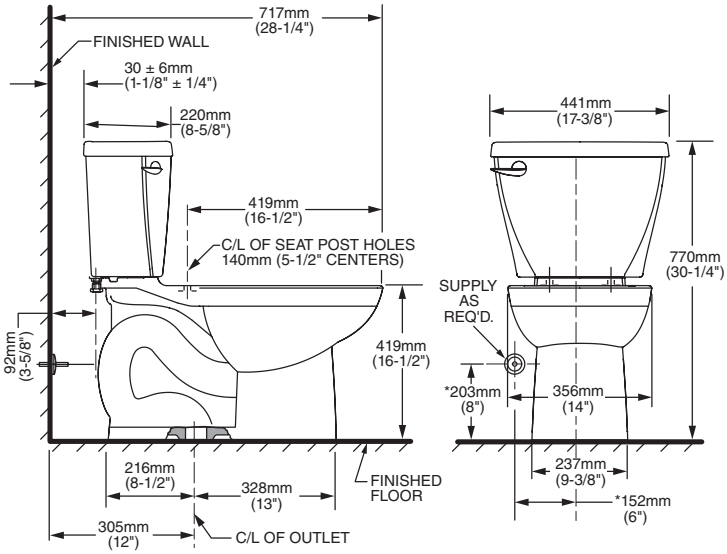

** Maximum Performance (MaP) testing performed by IAPMO R&T Lab. MaP Report conducted by Veritec Consulting, Inc. and Koeller and Company.

To Be Specified:
❑ Color: ❑ White ❑ Bone ❑ Linen
❑ Seat: #5320.110 EverClean® Round Front Seat with Slow Close Snap-Off Hinges
❑ Supply with stop:

NOTES:
THIS TOILET IS DESIGNED TO ROUGH-IN AT A MINIMUM DIMENSION OF 305MM (12") FROM FINISHED WALL TO C/L OF OUTLET.
SUPPLY NOT INCLUDED WITH FIXTURE AND MUST BE ORDERED SEPARATELY.
* DIMENSION SHOWN FOR LOCATION OF SUPPLY IS SUGGESTED.

IMPORTANT: Dimensions of fixtures are nominal and may vary within the range of tolerances established by ANSI Standard A112.19.2.
These measurements are subject to change or cancellation. No responsibility is assumed for use of superseded or voided pages.

MEETS THE AMERICANS WITH DISABILITIES ACT GUIDELINES AND ANSI A117.1 REQUIREMENTS FOR ACCESSIBLE AND USABLE BUILDING FACILITIES-CHECK LOCAL CODES.

WaterSense Meets EPA Criteria Certified by IAPMO R&T

WATER EFFICIENT PRODUCT

CADET® 3 Flushing System

© 2013 AS America Inc.