## ASSEMBLY INSTRUCTIONS

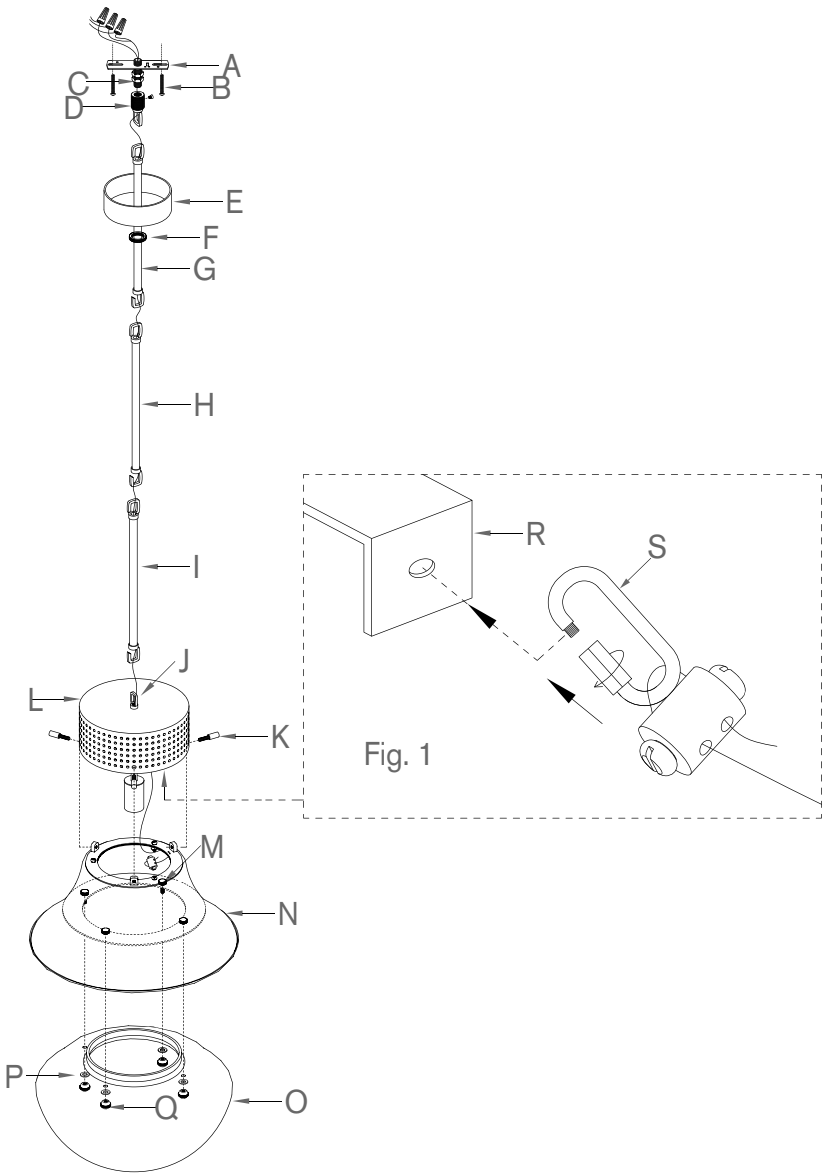


Precision Large Pendant
Item # KW5223

**WE RECOMMEND INSTALLATION OF THIS LIGHTING FIXTURE BE DONE BY A LICENSED ELECTRICIAN.**

**WARNING *** SWITCH OFF THE MAIN ELECTRICAL SUPPLY FROM THE MAIN FUSE BOX/CIRCUIT BREAKER BEFORE INSTALLATION.**

**INSPECT ITEM CAREFULLY BEFORE ATTEMPTING TO INSTALL. IF THERE IS ANY DAMAGE OR OBVIOUS DEFECT, DO NOT INSTALL.**

**ITEM MAY NOT BE RETURNED ONCE IT HAS BEEN INSTALLED.**

1. Carefully remove all parts from the carton.
2. To determine the lighting fixture suspension length from the ceiling for the product installation, you can use one or all connection poles (G), (H) and (I) to adjust the light fixture's suspension length.
3. Remove cap nuts (Q) and washers (P) from bolts (M), attach glass shade (O) to shade cover (N) by aligning the holes and inserting bolts (M) into the holes on glass shade (O) and secure with washers (P) and cap nuts (Q). Tighten by hand. DO NOT OVERTIGHTEN OTHERWISE THE GLASS WILL BE DAMAGED.
4. Insert light bulb (not included) into socket.
5. Attach the link with safety cable (S) to the tab (R) inside of shade holder (L), and lock with nut on the link (S).
6. Remove locking screws (K) from shade holder (L), attach shade cover (N) with glass shade (O) to shade holder (L) and secure with locking screws (K).
7. Hook connection rod (I) to hanging loop (J).
8. Hook connection rod (H) to connection rod (I).
9. Hook connection rod (G) to connection rod (H).
10. Unscrew canopy ring (F), slide canopy ring (F) and canopy (E) on connection rod (G).
11. Feed wire through connection rod (I)/ (H)/(G) and mounting loop (D).
12. Attach mounting strap (A) to ceiling outlet box and secure with mounting screws (B).
13. Insert top thread nipple (C) in mounting strap (A).
14. Attach mounting loop (D) to thread nipple (C).
15. Hook connection rod (G) to Mounting loop (D).
16. Attach the bare copper ground from the fixture to the ground junction box wire (usually green or copper), fasten together with a plastic wire connector. Tightly wrap the wire connector with electrical tape. Be sure no wire strands are exposed. IT IS IMPERATIVE THAT THE OUTLET BOX IN YOUR HOME BE PROPERLY GROUNDED.
17. Connect neutral wire from fixture (ribbed molded wire) to the neutral wire from the junction box (usually white) . Fasten both wires together with a plastic wire connector and tightly wrap the wire connector with electrical tape. Be sure no wire strands are exposed.
18. Connect the hot wire from the fixture (smooth wire) to the hot wire (usually black ) from the junction box. Fasten each together with a plastic wire connector and wrap the connection with electrical tape. DO NOT REVERSE THE HOT AND NEUTRAL CONNECTIONS OTHERWISE SAFETY WILL BE COMPROMISED.
19. Tuck the wire connections neatly into the ceiling outlet box.
20. Slip canopy (E) to ceiling and secure with canopy ring (F).
21. Installation is complete. Restore power and test fixture.

*** Clean with a dry, soft cloth only. Use no harsh abrasives or chemical agents.

Intertek DAMP

VISUAL COMFORT & CO. Est. 1987