Eemax™
Hot Water Solutions Made Easy

INSTALLATION GUIDE AND OWNER'S MANUAL

LavAdvantage

ELECTRIC INSTANTANEOUS WATER HEATERS



⚠WARNING ***BEFORE ATTEMPTING ANY INSTALLATION, MODIFICATION OR SERVICE OF THIS HEATER, MAKE SURE THE ELECTRICAL POWER IS DISCONNECTED.***

Read and understand these instructions thoroughly before attempting the installation or service of this water heater. Failure to follow these instructions can result in serious injury, death and/or property damage. The warranty of this water heater will depend upon the proper installation according to these instructions. Some heaters come supplied with separate faucet aerators. If supplied, the aerator must be installed in the faucet for optimum performance. This heater must be used to heat water only and be in a location where it is not subject to freezing temperatures. The manufacturer is not liable for any damages resulting from improper installation or misuse.

This installation must conform to the latest requirements of the National Electrical Code and all applicable state and local codes. This information is available through your local authorities. You must understand these requirements before beginning this installation.

This unit is not required by UL 499 to have a Temperature and Pressure relief valve (T&P). You should check with local codes to find out if one is required. If it is, it must be installed in the outlet hot water pipe between the heater and the isolation valve.

IMPORTANT SAFETY INSTRUCTIONS

When using this electrical equipment, basic safety precautions should always be followed, including the following:

READ AND FOLLOW ALL INSTRUCTIONS

A green terminal (or a wire connector marked “G”, “GR, “Ground”, or “GROUNDING”) is provided within the control box. To reduce the risk of electric shock, connect this terminal or connector to the grounding terminal of the electric service or supply panel with a continuous copper wire in accordance with your local electrical code.

Contents

GENERAL....3
1) MOUNTING THE UNIT TO THE WALL....4
2) PLUMBING HOOK-UP....5
3) ELECTRICAL HOOK-UP....7
4) COMMISSIONING THE HEATER....8
Congratulations!....9
5) UNIT OPERATION....10
PERIODIC MAINTENANCE....14
PART NUMBERS FOR FITTINGS, AERATORS AND AERATOR ADAPTORS....14
REPAIR PARTS FOR “THERMOSTATIC” UNITS....15

⚠CAUTION ***(CANADIAN INSTALLATIONS ONLY) CONNECT ONLY TO A CIRCUIT PROTECTED BY A CLASS A GROUND FAULT CIRCUIT INTERRUPTER. ATTENTION: BRANCHER UNIQUEMENT À UN CIRCUIT PROTÉGÉ PAR UN DISJONCTEUR DE FUITE DE TERRE DE CLASSE A.***

⚠CAUTION ***(CANADIAN INSTALLATIONS ONLY) DO NOT INSTALL IN A BATH ENCLOSURE OR SHOWER STALL OR CONNECT TO A SALT-REGENERATED WATER SOFTENER OR A WATER SUPPLY OF SALT WATER. ATTENTION: NE PAS INSTALLER DANS UNE BAIGNOIRE OU UNE CABINE DE DOUCHE ET NE PAS BRANCHER À UN ADOUCISSEUR D'EAU RÉGÉNÉRÉ AVEC DU SEL OU À UN APPROVISIONNEMENT EN EAU SALÉE.***

⚠CAUTION ***(CANADIAN INSTALLATIONS ONLY) USE COPPER CONDUCTORS ONLY. USE BONDING CONDUCTOR IN ACCORDANCE WITH THE CANADIAN ELECTRICAL CODE PART I. UTILISEZ DEZ CONDUCTEURS EN CUIVE UNIQUEMENT. UTILISEZ DES CONDUCTEURS DE MIZE À LA MASSE CONFORMEMENT AU CODE CANADIEN DE L'ÉLECTRICITÉ, PARTIE I.***

SAVE THESE INSTRUCTIONS

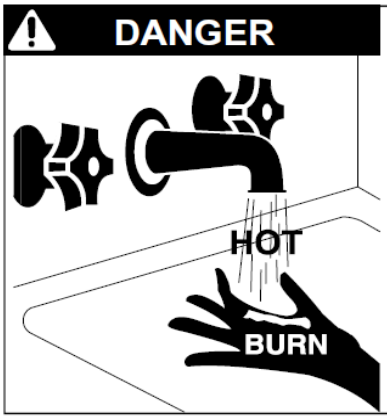

Hot water can be dangerous, especially for infants or children, the elderly, or infirm. There is hot water scald potential if the thermostat is set too high.

Water temperatures over 125° F (51° C) can cause severe burns or scalding resulting in death.

Hot water can cause first degree burns with exposure for as little as:

3 seconds at 140° F (60° C)

20 seconds at 130° F (54° C)

8 minutes at 120° F (48° C)

Test the temperature of the water before placing a child in the bath or shower.

Do not leave a child or an infirm person in the bath unsupervised.

GENERAL

The Eemax "**LavAdvantage**" heaters will provide optimum performance and energy savings when located under the sink and as close as possible to the point of hot water use. For best performance, the heater should be **BELOW** the point of use. Failure to do so may void the warranty. Contact your Eemax representative for further information.

"LavAdvantage" heaters accept cold or preheated water and heat it to temperatures suitable for normal domestic usage up to maximum of 140°F. With the "S" option, they can be used as a temperature booster for sanitation applications up to maximum 180°F. Units built with the "ML" option are factory-set to a maximum temperature of 110°F (range 80°F - 110°F) and are recommended for hand washing applications. The "ML" option is an excellent choice for supplying hot water to sensor-type or metering faucets.

1) MOUNTING THE UNIT TO THE WALL

⚠CAUTION ***THIS HEATER MUST BE INSTALLED IN A LOCATION WHERE IT IS NOT SUBJECT TO FREEZING TEMPERATURES.***

1. The heater should be mounted “under the sink” as close to the point of use as possible. Ideal position is fittings pointed down, but the heater can be mounted in any orientation



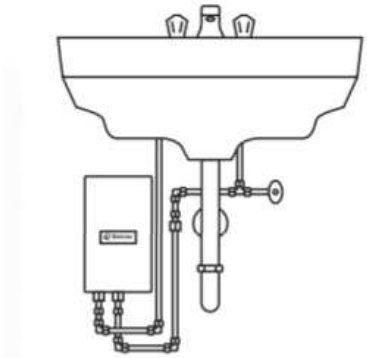



2. Make sure to leave a minimum of 8 inches service clearance at the end **OPPOSITE** the fittings.

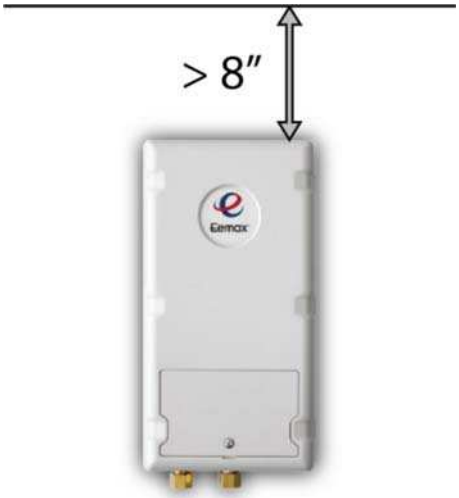

3. Remove the cover and fasten to the wall using the four mounting holes at each corner of the back plate. Replace the cover.

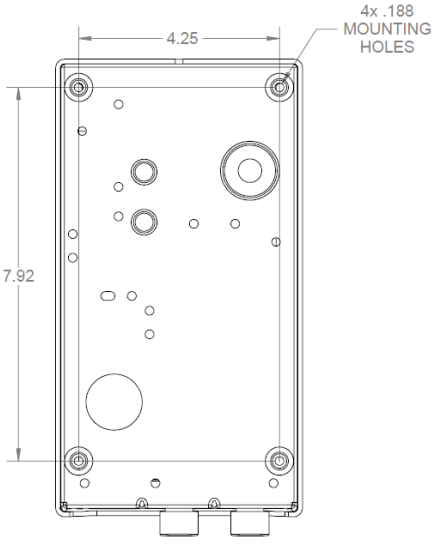

2) PLUMBING HOOK-UP

The heater is supplied with brass 3/8" compression fittings that are compatible with either stainless steel flex hose, copper or plastic pipe. Make sure these fittings are used for this installation. Contact your Eemax representative for further information.

⚠CAUTION ***NEVER SUBSTITUTE THREADED PIPE FITTINGS USING PIPE DOPE OR TEFLON TAPE AND NEVER SOLDER ANY PIPE CONNECTIONS WHILE ATTACHED TO THIS HEATER BECAUSE DAMAGE TO THE HEATER WILL RESULT. DOING THIS WILL VOID THE WARRANTY!***

Eemax strongly recommends that the heater be supplied directly from the main cold water line when possible. This helps to avoid a potential water flow interruption to the heater which could lead to a failure of the heating element.

Minimum working pressure of 30psi.

Maximum Operating System Pressure of – 150 psi.

Optimum Operating Pressure 35 - 80 PSI (Anything over 80 PSI must have pressure reducing regulator).

For optimum performance, we recommend the use of isolation valves (full flow ball type) on the inlet and outlet pipes.

⚠WARNING ***BEFORE ATTEMPTING ANY INSTALLATION, MODIFICATION OR SERVICE OF THIS HEATER, MAKE SURE THE ELECTRICAL POWER IS DISCONNECTED.***

1. The heater's water INLET and OUTLET are labeled. Install full flow ball valves to the inlet and outlet pipes and run water through the inlet pipe into a bucket to purge it of any debris. Close the inlet ball valve.	
2. Make sure the inlet filter screen is present in the inlet fitting and the inlet and outlet pipes are correctly aligned with the heater connections to minimize stress on the heater.	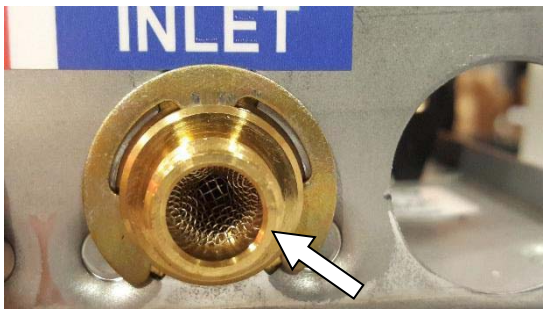

3. Remove the cover. Connect the pre-assembled inlet and outlet pipes to the heater and fully open the inlet and outlet ball valves. Check for water leaks. If a leak is at a compression fitting, slowly tighten the compression nut until it stops. Replace the cover.

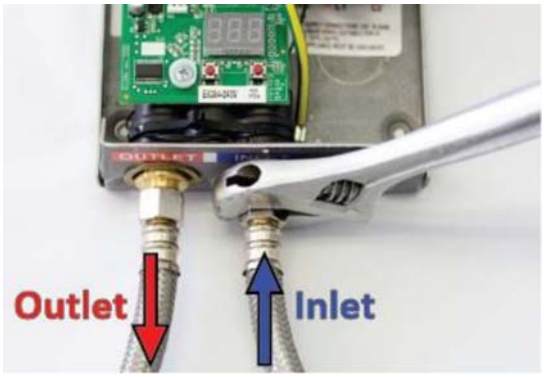



4. Open the hot water faucet and run water for minimum 60 seconds and until the flow is continuous and free of air pockets. Close the faucet and install the aerator (if supplied).

Failure to install aerator (if supplied) will result in lower-than-expected heater performance**.

Model	# of Aerators	Model	# of Aerators
SPEX3512T ML	2	SPEX3208T ML	2
SPEX35T ML	2	SPEX4208T ML	2
SPEX48T ML	2	SPEX3277T ML	2
SPEX55T ML	2	SPEX4277T ML	2
SPEX65T ML	2	SPEX60T ML	2
SPEX75T ML	2	SPEX80T ML	2
SPEX95T ML	3	SPEX90T ML	3
SPEX012240T ML	3	SPEX100T ML	3

**ML thermostatic models are designed to deliver a minimum flow of 0.35 GPM to each lavatory. Please install the supplied aerators to ensure maximum heating performance.



3) ELECTRICAL HOOK-UP

⚠WARNING ***BEFORE BEGINNING ANY WORK ON THIS INSTALLATION, BE SURE THAT THE ELECTRICAL BREAKER IS "OFF" AND THAT ALL MOUNTING AND PLUMBING WORK HAS BEEN COMPLETED PER THESE INSTRUCTIONS.***

This heater must have its own independent circuit using insulated, UL listed, 2 wire cable (2 wire plus ground) of the appropriate size suitable for up to 75°C and protected by the correctly rated circuit breaker. Refer to the chart below:

ELECTRICAL SPECIFICATIONS

LavAdvantage model number	Voltage (VAC)	Max power (kW)	Max current (A)	Minimum wire size (AWG)
SPEX1812T	120	1.8	15	14
SPEX2412T	120	2.4	20	14
SPEX3012T	120	3	25	12
SPEX3512T	120	3.5	29	12
SPEX35T	240	3.5	15	14
SPEX48T	240	4.8	20	14
SPEX55T	240	5.5	23	12
SPEX65T	240	6.5	27	12
SPEX75T	240	7.5	32	10
SPEX95T	240	9.5	40	8
SPEX012240T	240	11.5	48	6
SPEX3208T	208	3	15	14
SPEX4208T	208	4.1	20	14
SPEX8208T	208	8.3	40	8
SPEX3277T	277	3	11	14
SPEX4277T	277	4.1	14.8	14
SPEX60T	277	6	22	14
SPEX80T	277	8	29	12
SPEX90T	277	9	33	10
SPEX100T	277	10	36	10

1. Power cable entry to the heater should be made through one of the "knock-out" holes located on the back plate or top/bottom ends of the unit. Use the appropriate strain relief fitting.



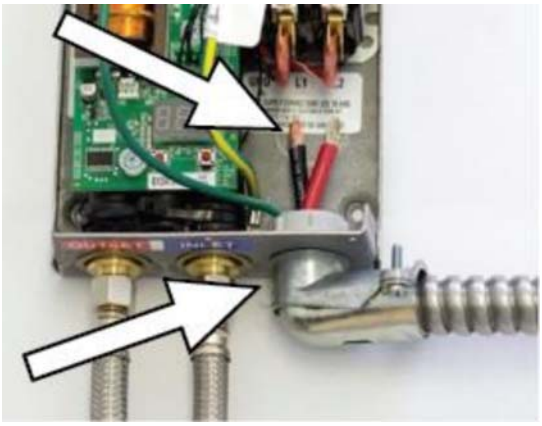

2. The power leads are to be secured to the L1 and L2 or L and N connectors on the terminal block or relay. The ground lead is to be secured to the GND connector on the block or the green ground wire with the provided wire nut.	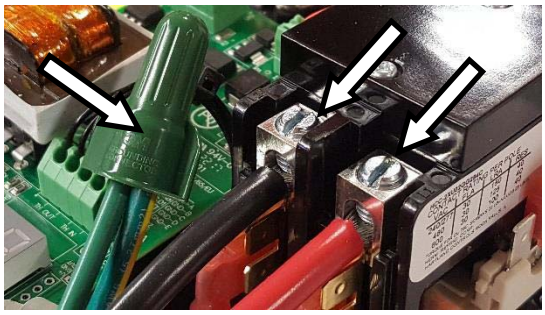
⚠WARNING ***FAILURE TO GROUND THE SYSTEM MAY RESULT IN SERIOUS INJURY, DEATH AND/OR PROPERTY DAMAGE.***	
3. Leave the breaker in the "OFF" position. Proceed to the next section: *COMMISSIONING THE HEATER*	

4) COMMISSIONING THE HEATER

⚠CAUTION ***BEFORE SWITCHING THE ELECTRICAL BREAKER "ON", MAKE SURE THE INLET AND OUTLET BALL VALVES ARE FULLY OPEN AND WATER IS FLOWING THROUGH THE HOT WATER FAUCET FOR A MINUTE OR TWO UNTIL THE FLOW IS CONTINUOUS AND FREE FROM AIR POCKETS. DO NOT SWITCH THE BREAKER "ON" IF THERE IS A POSSIBILITY THE WATER IN THE HEATER IS FROZEN.***

1. Make sure water is flowing through the faucet.	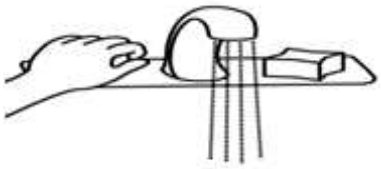
2. Switch "ON" the electric power supply at the breaker.	

3. Keep water flowing through the faucet for the next step.

4. For 60 seconds after “power ON”, display will countdown from 60 seconds to 0. When the display timer reaches 45, the unit starts heating.

5. After the 60 seconds in step 4, the display will show temperature setpoint.

The heater is considered commissioned at this point. Faucet can be turned off and used as needed.

Note: the temperature display will turn off after 5 minutes of inactivity. Display turns on when water flows through heater or if either pushbutton is pressed.



Congratulations!

Your Eemax tankless electric water heater is fully installed and ready for use!

MAXIMUM TEMPERATURE RISE AT SPECIFIED FLOW RATE, °F

	GPM						
Model	0.35	0.5	1	1.5	2	2.5	3
SPEX1812T	35	25	12	8	6	5	4
SPEX2412T	47	33	16	11	8	7	5
SPEX3012T	59	41	20	14	10	8	7
SPEX3512T	68	48	24	16	12	10	8
SPEX35T	68	48	24	16	12	10	8
SPEX48T	*	66	33	22	16	13	11
SPEX55T	*	75	38	25	19	15	13
SPEX65T	*	89	44	30	22	18	15
SPEX75T	*	102	51	34	26	20	17
SPEX95T	*	130	65	43	32	26	22
SPEX012240T	*	*	79	52	39	31	26
SPEX3208T	59	41	20	14	10	8	7
SPEX4208T	*	56	28	19	14	11	9
SPEX8208T	*	113	57	38	28	23	19
SPEX3277T	59	41	20	14	10	8	7
SPEX4277T	*	56	28	19	14	11	9
SPEX60T	*	82	41	27	20	16	14
SPEX80T	*	*	55	36	27	22	18
SPEX90T	*	*	61	41	31	25	20
SPEX100T	*	*	68	46	34	27	23

5) UNIT OPERATION

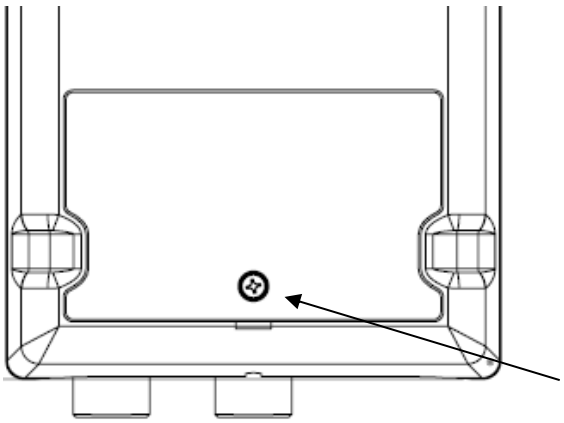

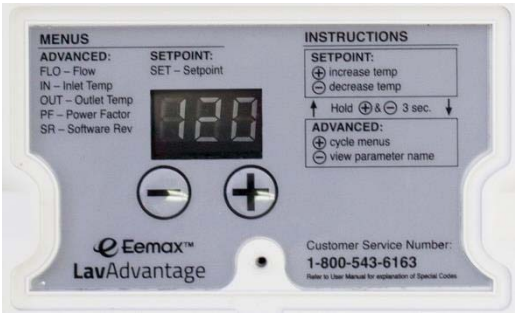

Remove screw to access user interface

Using the Eemax LavAdvantage Control Functions

Using the Eemax LavAdvantage is EASY. There are only 2 buttons: "–"and "+". Moving through the functions requires a minimum of effort – just follow along!

During operation the unit will show the current set point temperature and will display this temperature for 5 minutes after the unit is active.

Factory temperature setpoints:

- Standard heaters, S models: 120°F
- Units 3.5 kW and below: 105°F
- ML models: 110°F
- EE models: 90°F

SETTING TEMPERATURE

To INCREASE temperature, tap the "+" button repeatedly, or hold the "+" down to INCREASE the temperature quickly. To DECREASE temperature, tap the "–" button repeatedly, or hold the "–" down to DECREASE the temperature quickly.

ADVANCED FUNCTIONS

To access the ADVANCED FUNCTIONS menu:

With the display showing the current setpoint temperature, press BOTH "+" AND "–" buttons simultaneously for 3 seconds and the display will show:

FLOW RATE (GPM or LPM)

Pressing "-" at any time will display screen title*. Continue tapping the "+" button to display the following (in this order)

INLET TEMPERATURE (cold water temperature) (°F or °C)

OUTLET TEMPERATURE (hot water temperature) (°F or °C)

POWER FACTOR (how hard the heater is ‘working’ shown as a percentage)

SOFTWARE REVISION (For Eemax Technical Service use only)

Pressing both “+” and “–“ at any time for 3 seconds returns the display to the temperature set point, or just let the heater return to set point display on its own (30 seconds timeout).

ERROR CODES & UNITS

From Advanced Menu, press and hold the “+” and “–“ buttons for 10 seconds.

CURRENT ERROR will display. F0 displays if no errors.

Press the “+” button for 1 second to cycle through the following screens:

CURRENT ERROR

PAST ERRORS - Tap the “+” button to cycle through the past 5 previous errors. F0 displays if no errors.

UNITS – Tap the “+” button to cycle between °F/GPM and °C/LPM.

To return to setpoint hold “+” and “–“ for 10 seconds, or just let the heater return to set point display or display turn-off on its own (30 seconds timeout).

*Screen titles: SET, FLO, IN, OUT, PF, SR, CE, PE1-5, UN

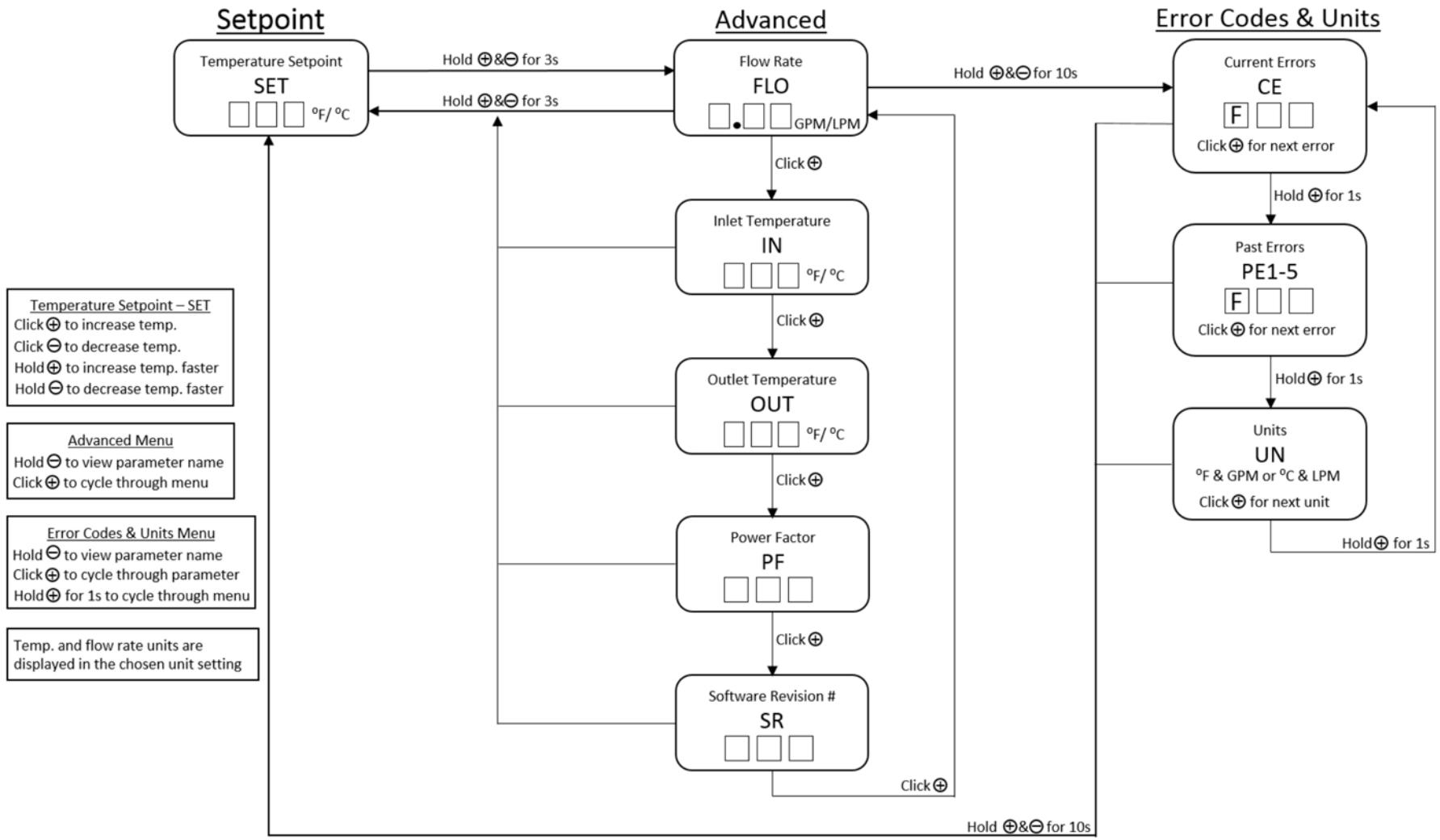
Setpoint
Advanced
Error Codes & Units
Temperature Setpoint
SET
°F/ °C
Hold ⊕&⊖ for 3s
Hold ⊕&⊖ for 3s
Flow Rate
FLO
GPM/LPM
Hold ⊕&⊖ for 10s
Current Errors
CE
F
Click⊕ for next error
Click⊕
Inlet Temperature
IN
°F/ °C
Hold ⊕ for 1s
Past Errors
PE1-5
F
Click⊕ for next error
Click⊕
Outlet Temperature
OUT
°F/ °C
Hold⊕ for 1s
Units
UN
°F & GPM or °C & LPM
Click⊕ for next unit
Click⊕
Power Factor
PF
Click⊕
Software Revision #
SR
Click⊕
Hold ⊕&⊖ for 10s
Hold⊕ for 1s
Temperature Setpoint – SET
Click⊕ to increase temp.
Click⊖ to decrease temp.
Hold⊕ to increase temp. faster
Hold⊖ to decrease temp. faster
Advanced Menu
Hold⊖ to view parameter name
Click⊕ to cycle through menu
Error Codes & Units Menu
Hold⊖ to view parameter name
Click⊕ to cycle through parameter
Hold⊕ for 1s to cycle through menu
Temp. and flow rate units are displayed in the chosen unit setting

BASIC TROUBLESHOOTING

Fault Code	Fault name	Possible causes	Possible Outcome	Reset method
F23	No heat	- element burned out - ECO tripped/malfunctioning - interrupted triac - relay/contactor malfunctioning - board failure - inlet thermistor interrupted	- heater stops until the fault is cleared	- causing condition disappears
F24	Low heat	- severe undervoltage - triac failure - partial board failure - partial inlet/outlet thermistors failure	- heater keeps running while displaying the fault code	- manual fault clear or causing condition disappears
F33	Shorted triac	- both triacs (triac) failed to full conduction mode	- heater stops functioning	- fault cleared only by power cycling
F34	Overvoltage	- voltage too high compared to the specified value	- unit will cease to function	- manual fault clear
F36	Undervoltage	- voltage too low compared to the specified value	- unit keeps functioning while displaying the warning message	- causing condition disappears
F38	High flow	- flow is too high for the unit to be able to keep up with heating water to setpoint temperature	- Fault code displayed, unit continues to operate	- reduce flow below maximum limit for the current heater parameters
F47	Inlet thermistor failure	- inlet thermistor interrupted or disconnected	- heater will run based on outlet detected temperature	- causing condition disappears
F48	Outlet thermistor failure	- outlet thermistor interrupted or disconnected	- heater will run based on inlet temperature and flow	- causing condition disappears
F64	Freeze protect	- inlet temperature too low - partial inlet thermistor failure	- heater will not run	- causing condition disappears
F83	Inverted flow	- water flows through the heater in the wrong direction	- unit will cease to function	- causing condition disappears

PERIODIC MAINTENANCE

This heater is designed for many years of care free use. In order to maintain consistent water flow, it may be necessary to periodically clean the faucet aerator or the filter screen located in the brass inlet fitting at the heater.

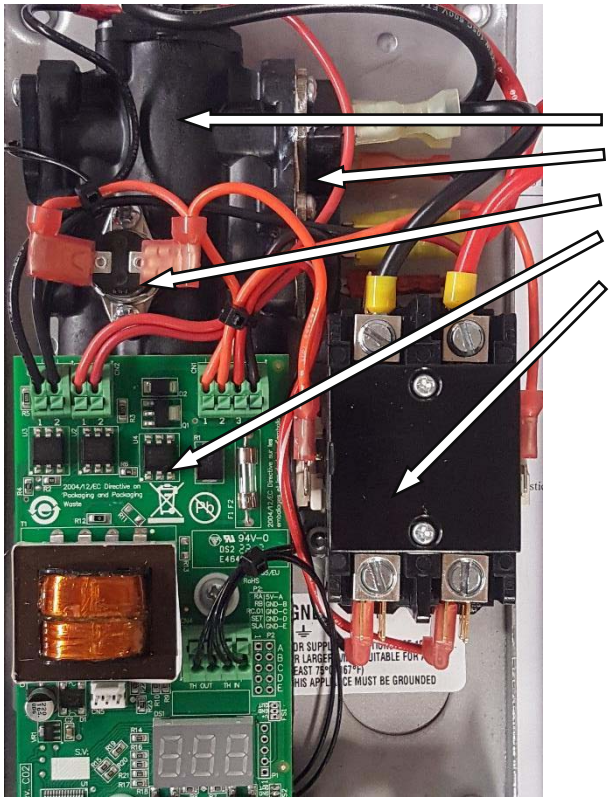

Heating chamber
Triacs
Energy cut-off (ECO)
Control board
Contactor

ELEMENT CARTRIDGE (pictured below)
INSTALLS INSIDE HEATING CHAMBER



PART NUMBERS FOR FITTINGS, AERATORS AND AERATOR ADAPTORS

COMPRESSION FITTINGS:		AERATORS:	
3/8" NUT	EX68B	0.35 GPM	EX0061-0.3-AER
3/8" SLEEVE	EX68C		

MALE 13/16"-27 X MALE 55/64"-27	EX61-339
FEMALE 3/4"-27 X MALE 55/64"-27	EX61-341
FEMALE 13/16"-24 X MALE 55/64"-27	EX61-349
MALE 15/16"-27 X MALE 55/64"-27	EX61-336
MALE 11/16"-27 X MALE 55/64"-27	EX60-344
MALE M24X1/FEMALE M22X1 X MALE 55/64"-27	EX61-387

REPAIR PARTS FOR “THERMOSTATIC” UNITS

Model number	Element cartridge	Control board	Relay	Energy Cut-Off (ECO)
SPEX1812T	EX800 PRT	EX384-120	EX259B	EX278A
SPEX2412T	EX610	EX384-120	EX259B	EX278A
SPEX3012T	EX480	EX384-120	EX259B	EX278A
SPEX3512T	EX410	EX384-120	EX259B	EX278A
SPEX3208T	EX1440	EX384-240	EX255B	EX278A
SPEX4208T	EX1050	EX384-240	EX255B	EX278A
SPEX8208T	EX520	EX384-240	EX255B	EX278A
SPEX35T	EX1650	EX384-240	EX255B	EX278A
SPEX48T	EX1200	EX384-240	EX255B	EX278A
SPEX55T	EX1050	EX384-240	EX255B	EX278A
SPEX65T	EX890	EX384-240	EX255B	EX278A
SPEX75T	EX770	EX384-240	EX255B	EX278A
SPEX95T	EX630	EX384-240	EX255B	EX278A
SPEX012240T	EX500 PRT	EX384-240	EX1050-1	EX278A
SPEX3277T	EX260	EX384-277	EX253B	EX278A
SPEX4277T	EX1870	EX384-277	EX253B	EX278A
SPEX60T	EX1280	EX384-277	EX253B	EX278A
SPEX80T	EX960	EX384-277	EX253B	EX278A
SPEX90T	EX850	EX384-277	EX253B	EX278A
SPEX100T	EX760	EX384-277	EX253B	EX278A
* If heater has suffix “DI” order element with suffix “SS”				

If you need any assistance from our Technical Service Department, make sure you can identify this water heater by having the model no:_____ and serial number:_____.

Call 203-267-7890 or toll free: 800-543-6163.

Eemax Inc., 400 Captain Neville Drive, Waterbury, CT 06705

Tel: 800-543-6163, 203-267-7890, Fax: 203-267-7975, email: support@eemaxinc.com

Notes:

Eemax Inc., 400 Captain Neville Drive, Waterbury, CT 06705

Tel: 800-543-6163, 203-267-7890, Fax: 203-267-7975, email: support@eemaxinc.com

EX07200-81 Rev A 2019-04