T18IF900SP

18-INCH BUILT-IN FREEZER COLUMN WITH INTERNAL ICE MAKER

FREEDOM® COLLECTION, PANEL-READY

FEATURES & BENEFITS

- Freedom® Hinge enables true flush design
- The new Auto Door Opening provides the opening of the door with just a slight push or pull
- Energy Efficient Diamond Ice made with twist tray technology
- Smooth Filtered Lighting for clear and easy viewing of all product
- SoftClose® Drawers for easy and controlled storage
- Sleek clean design for the perfect symmetry when paired with additional columns
- TFT control panel managing all your columns functions

TEMPERATURE RANGES	
Freezer	-11°F (-24°C) to 7°F (-14°C)
SuperFreeze®	-11°F (-24°C) for approximately 60 hours
Energy Saving (Economy) Mode	3°F (-16°C)

GENERAL PROPERTIES	
Home Connect™ (Wi-Fi Enabled)	No
Panel Ready	Yes
Reversible Door Swing	Yes
SoftClose® Drawers	Yes
Lighting	ALL LED Sidewall and Theater Lighting
Full Width Shelves	3
Adjustable Shelves	3
Freezer Shelves	4
Shelf Material	Glass w/Aluminum Profile
Full Extension Drawers @ 115° Door Opening Angle	Yes
General Use Drawer	2
Door Bins	4
External LED Proximity Sensor	No
Oversized Dispenser Opening	No
Chilled Water, Crushed and Cubed Ice	No
Rapid Water Replenishment System	No
Ice Maker with Diamond Ice System	Yes
Door Open Alarm	Yes
Open Door Assist	Yes
Special Modes	Sabbath, Economy, Vacation
CAPACITY	
Total Capacity (cu. ft.)	8.6 cu. ft.
PERFORMANCE	
Dedicated Evaporator & Compressor System	Yes
SuperFreeze®	Yes
Defrost Process	Frost-Free
TECHNICAL DETAILS	
Watts (W)	350 W
Current (A)	15 A
Volts (V)	120V-3 Prong
Frequency (Hz)	60 Hz
Power Cord Length (in.)	118
Plug Type	120V-3 Prong
DIMENSIONS & WEIGHT	
Appliance Dimensions (H x W x D) (in.)	83 3/4"* x 17 3/4" x 24"
Required Cutout Size (H x W x D) (in.)	84" x 18" x 25"
Net / Gross Weight (lbs)	271 / 291 lbs
EFFICIENCY	
ENERGY STAR® Qualified	Yes
Annual Energy Consumption	418 kWh

*Height adjustable + / -1/2" (+ / -13 mm)

T18IF900SP

18-INCH BUILT-IN FREEZER COLUMN WITH INTERNAL ICE MAKER

FREEDOM® COLLECTION, PANEL-READY

WARRANTY	
Limited, Entire Appliance, Parts and Labor on Any Part of the Refrigerator that Fails Because of a Manufacturing Defect	2 Year
Limited Warranty for Sealed Refrigeration System**; Parts and Labor	3rd to 6th Year
Limited Warranty for Sealed Refrigeration System**; Parts Only	7th to 12th Year
Limited Warranty for Stainless Steel Rust-Through	Lifetime

**Sealed refrigeration system includes compressor, evaporator, condenser, dryer / strainer and connection tubing

CUTOUT DIMENSIONS

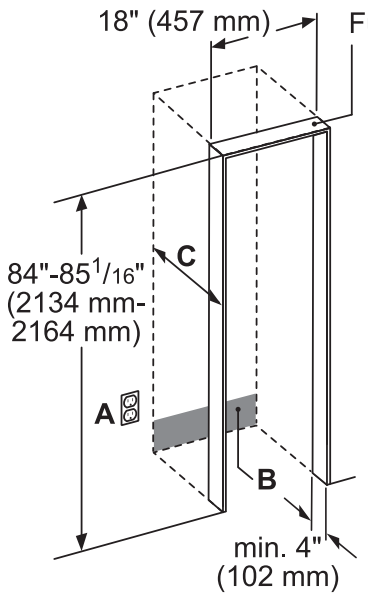

A: Area for installation of power connection.
B: Area for running the water line. It is recommended that the waterbox is placed adjacent to the installation cavity, so that it can be accessed for service without uninstalling the appliance. If this is not possible, place the recessed waterbox adjacent to the water supply socket elevated at the heights as referenced in areas A and B.
C: Recess depth depends on kitchen design.For a flush installation, the depth needs to be at least 24 inches plus the thickness of the door panel.

Stainless steel models contain a panel-ready base unit, ready-to-install stainless steel door(s) with a right or left door swing and handle(s).

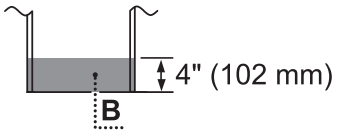

TOP VIEW CLEARANCE

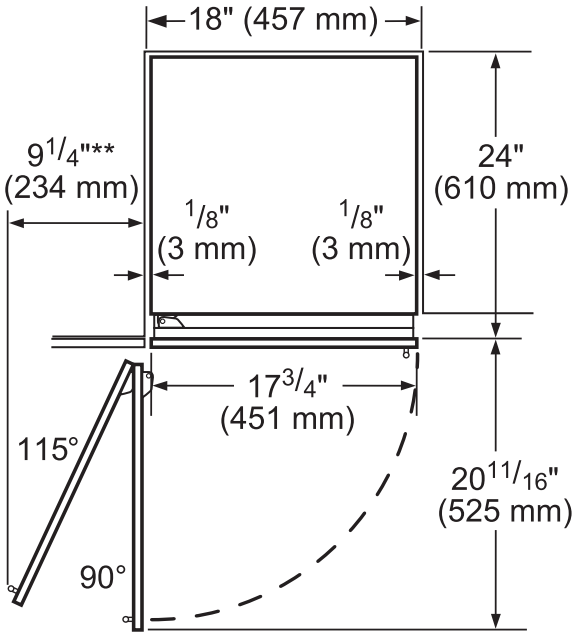

** Door handle must be added to this measurement

* Depends on the thickness of the unit door.
3/4" (19 mm) refers to the stainless steel door. (Special accessory.)

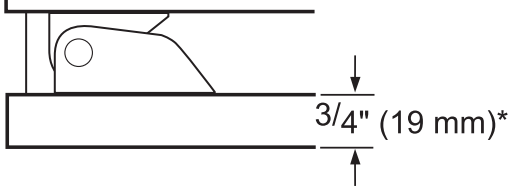

T18IF900SP

18-INCH BUILT-IN FREEZER COLUMN WITH INTERNAL ICE MAKER

FREEDOM® COLLECTION, PANEL-READY

PRODUCT AND PANEL DIMENSIONS

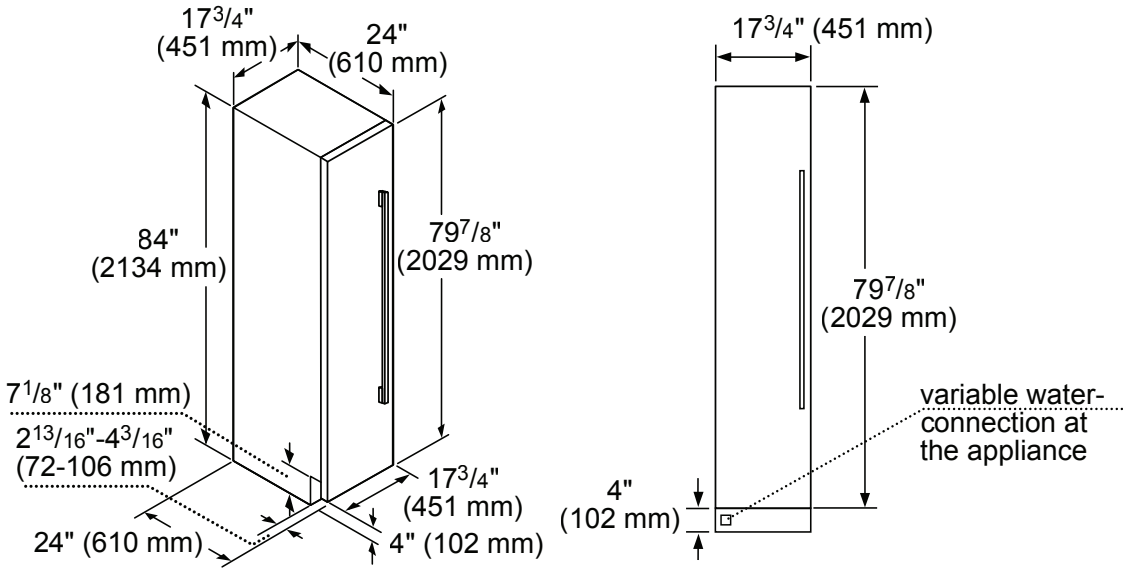

ACCESSORIES (OPTIONAL)

FLAT STAINLESS STEEL DOOR PANELS

TFL18IR800
18-Inch Flat Stainless Steel Door Panel Without Dispenser

NOTE: Handleless Panels should not be installed on units without the Soft-Close capability. If you are uncertain if you have a refrigeration unit with Soft-Close capability please contact our customer team by calling 1-800-735-4328.

STORAGE

ICEBUCKETL
Large Ice Bucket

FILTERS

REPLFLTR10
Freedom® Water Filter
Replacement water filter for use in all freezer and bottom freezer models

HANDLES

NOTE: Choose one handle for each column, choose 2 handles for each 2-door bottom freezer and choose 3 handles for each French Door bottom freezer.

PR36HNDL20
36-Inch Professional Series Handle

PR30HNDL20
30-Inch Professional Series Handle

MS36HNDL20
36-Inch Masterpiece® Series Handle

MS30HNDL20
30-Inch Masterpiece® Series Handle

AVAILABLE WHILE SUPPLIES LAST:

MS36HNDL10
36-Inch Masterpiece® Series Classic Handle

MS30HNDL10
30-Inch Masterpiece® Series Classic Handle

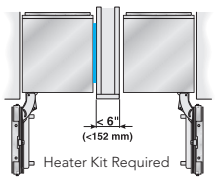

HEATRKIT20 – 13W @ 120V

Freedom® Heater Kit

When two appliances are installed side-by-side a sealing kit must be used. For combinations that involve a freezer column, this kit is included. For all other (non-traditional, i.e. two wine columns, two bottom freezers, etc.) side-by-side combinations or instances where any appliances are installed less than 6-inches (152 mm) apart from one another but not connected side-by-side, purchase this kit. This kit is recommended for use with any installation in areas that are subject to humidity, or located next to an outside wall.

These warranties give you specific legal rights and you may have other rights that vary from state to state. Full warranty and limited warranty from date of installation. For complete warranty details, refer to your Use & Care manual, or ask your dealer.

Specifications are for planning purposes only. Refer to installation instructions and consult your countertop supplier prior to making counter opening. Consult with a heating and ventilation engineer for your specific ventilation requirements. For the most detailed information, refer to installation instructions accompanying product or write to Thermador indicating the model number. Specifications are correct at time of printing. Thermador reserves the right to change product specifications or design without notice. Some models are certified for use in Canada. Thermador is not responsible for products that are transported from the U.S. for use in Canada.

1 800 735 4328 | USA THERMADOR.COM | CANADA THERMADOR.CA | ©2018 BSH HOME APPLIANCES CORPORATION. ALL RIGHTS RESERVED.