Pfister

Contempra™

Tub And Shower Trim

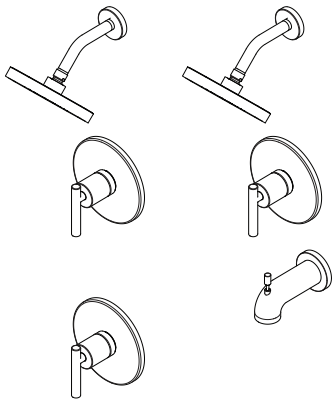

R89-1NCBG Finish*(BG)* ❑ LG89-7NCBG Finish*(BG)* ❑
R89-1NCC Finish*(C)* ❑ LG89-7NCC Finish*(C)* ❑
R89-1NCK Finish*(K)* ❑ LG89-7NCK Finish*(K)* ❑
LG89-8NCBG Finish*(BG)* ❑
LG89-8NCC Finish*(C)* ❑
LG89-8NCK Finish*(K)* ❑

- Single Control
- Trim Only, Valve Not Included

Specifications

Features

- 1.8 GPM Showerhead
- Brass Ball Joints
- Fixed Hub
- PVD Finish (K Finish Only)
- Raincan Included
- Volume and Temperature Control
- Tub & Shower (8NC Only)
- Shower Only (7NC Only)
- Flange Only (1NC Only)
- Pforever Warranty®

Code Compliance

Pfister products are designed and manufactured in compliance with the following standards and codes:

- IAPMO Certified
- CSA B125 Certified
- ASME A112.18.1
- Cal Green Compliant
- CEC Compliant
- ADA Compliant-ANSI A117.1 (Lever handles only)

Dimensions

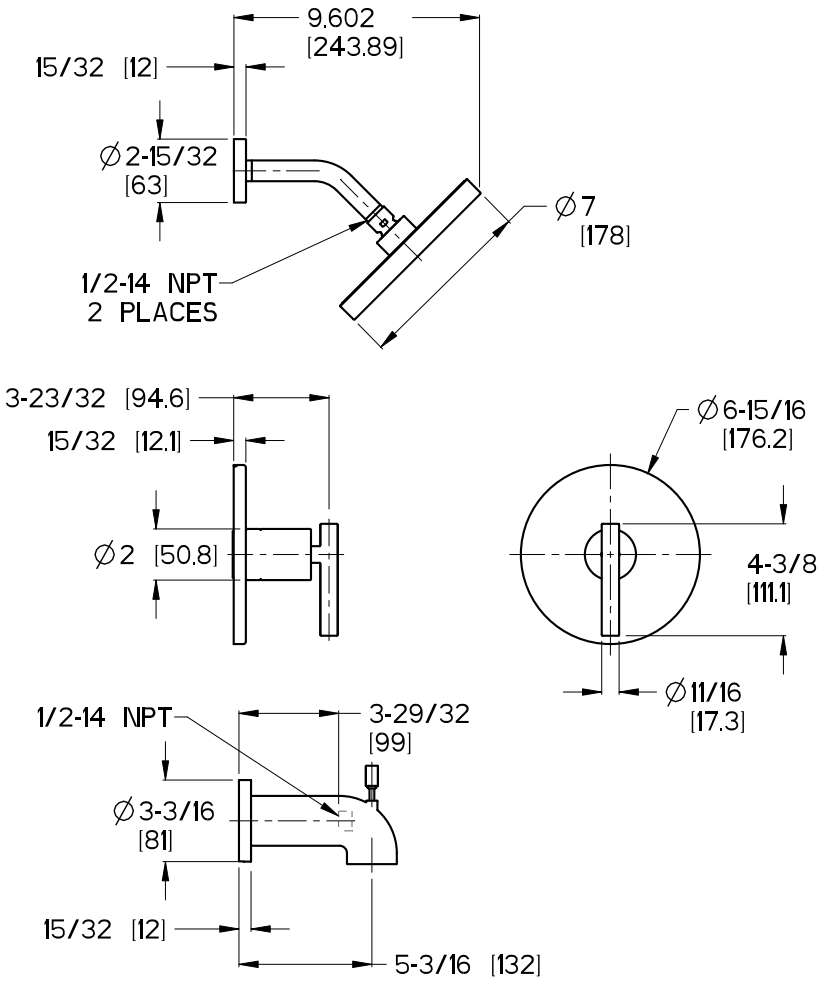

1-800-PFAUCET (732-8238) • pfisterfaucets.com/support

Copyright © 2017, Pfister Inc.