specifications

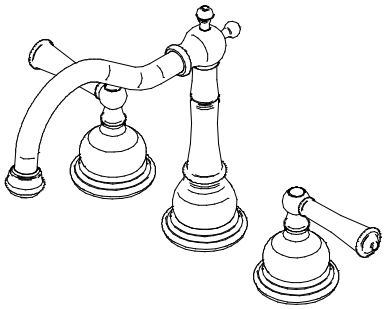

BARREA™ Roman Tub Set

MODEL	FINISH
MX78827	Polished Chrome
MX78826	Brushed Nickel
MX78824	Polished Nickel
MX78845	Olive Bronze

FEATURES

- Faucet ceramic valve 3/4"
- Max Flow Rate: ~7GPM at 45 PSI

CODE COMPLIANCE

- ASME A112.18.1 / CSA B125.1
- IAPMO Certified

WARRANTY

- Limited Lifetime Warranty

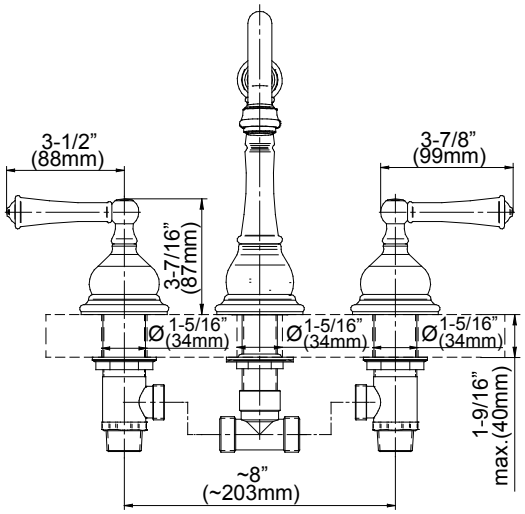

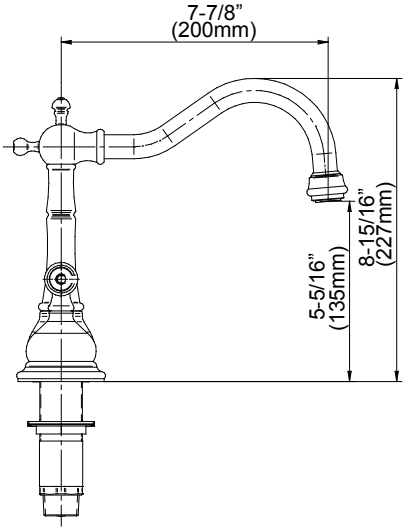

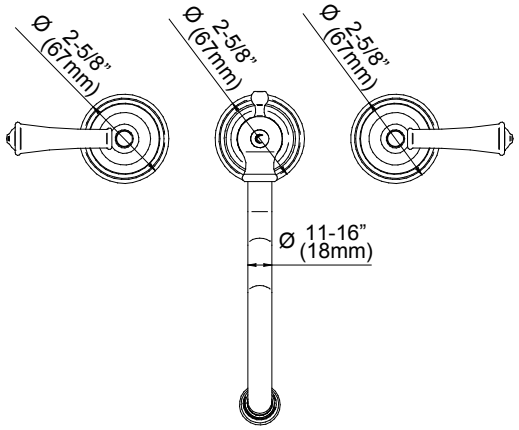

INSTALLATION DIMENSIONS

Jacuzzi reserves the right to make changes in specifications and materials and to change and discontinue models, both without the notice or obligation. Dimensions are for reference only.