www.caleffi.com

FlowShield™ RP
Testable, reduced pressure zone backflow preventer

© Copyright 2025 Caleffi

574 Series



1013 B64.4 LOW LEAD

Function

The reduced pressure zone backflow preventer can be used in all systems where there is danger of the potable water supply system being contaminated. It prevents an accidental reduction in the pressure in the distribution system from causing backflow from contaminated water in user installations. The valve is ICC-ES certified to NSF/ANSI/CAN 61, CSA B64.4, and AWWA C511. It is listed and certified by ASSE to Standard 1013, Seal Number 1748. It complies with codes IPC, IRC, NPC and UPC for use in accordance with the US and Canadian plumbing codes, and standard NSF/ANSI/CAN 372, low lead.

574 series FlowShield™ RP:
testable reduced pressure zone backflow preventer
size ½", ¾", 1", 1¼", 1½" & 2"
NPT female and press

Technical specifications

Materials

Body:	DZR low-lead brass, EN 1982 CC768S all sizes except 2" is CB480K-DW
Cover:	DZR low-lead brass, EN 12165 CW724R all sizes except 2" is CB480K-DW
Check valves:	PSU-POM-CW724R
Springs:	stainless steel
Diaphragms and seals:	peroxide-cured EPDM

Isolation ball valves, inlet and outlet

Body material:	C89833 low-lead bronze
Ball:	304 stainless steel
Handle and nut:	steel
Seat ring and packing gland:	PTFE
Gland nut:	brass
Stem:	low-lead brass

Performance

Suitable Fluids:	water
Max. working pressure:	150 psi (10 bar)
Max. working temperature:	150°F (65°C)
Pressure test ports:	¼" NPT upstream, intermediate, downstream
Connections:	½", ¾", 1", 1¼", 1½" and 2" NPT female & press

Certifications

1. Listed and certified by ASSE to Standard 1013, Seal Number 1748.
2. CSA B64.4 and AWWA C511 compliant, certified by ICC-ES, file PMG 1433.
3. NSF/ANSI/CAN 61 compliant, certified by ICC-ES, file PMG 1512.
4. NSF/ANSI/CAN 372, California HSC 116875, United States S.3874, Vermont Act 193, and Maryland HB 372 compliant, certified by ICC-ES, file PMG 1360.

SAFETY INSTRUCTION / *CONSIGNE DE SÉCURITÉ*

This safety alert symbol will be used in this manual to draw attention to safety related **instructions. When used, the safety alert symbol means ATTENTION! BECOME ALERT! YOUR SAFETY IS INVOLVED! FAILURE TO FOLLOW THESE INSTRUCTIONS MAY RESULT IN A SAFETY HAZARD**.

Ce symbole d'avertissement servira dans ce manuel à attirer l'attention sur la sécurité concernant instructions. Lorsqu'il est utilisé, ce symbole signifie ***ATTENTION ! DEVENEZ ALERTE ! VOTRE SÉCURITÉ EST EN JEU ! NE PAS SUIVRE CES INSTRUCTIONS PEUT PROVOQUER UN RISQUE DE SECURITE***.

WARNING: This product can expose you to chemicals including lead, which is known to the State of California to cause cancer and birth defects or other reproductive harm. For more nformation go to www.P65Warnings.ca.gov.

AVERTISSEMENT: Ce produit peut vous exposer à des produits chimiques comme le plomb, qui est connu dans l'État de Californie pour causer le cancer, dommages à la naissance ou autre. Pour plus d'informations rendez-vous www.P65Warnings.ca.gov.

WARNING: Caleffi shall not be liable for damages resulting from stress corrosion, misapplication or misuse of it's products.

AVERTISSEMENT: *Caleffi ne sera pas responsable des dommages résultant de la corrosion sous tension, d'une mauvaise application ou d'une mauvaise utilisation de ses produits.*

CAUTION: All work must be performed by qualified personnel trained in the proper application, installation, and maintenance of systems in accordance with all applicable codes and ordinances.

ATTENTION: *Tous les travaux doivent être effectués par du personnel qualifié formé à la bonne application, installation et maintenance des systèmes conformément aux codes et règlements locaux.*

CAUTION: If the backflow preventer is not installed, commissioned and maintained properly, according to the instructions contained in this manual, it may not operate correctly and may endanger the user.

ATTENTION: *Si Disconnecteur n'est pas installé, mis en service et entretenu correctement, selon les instructions contenues dans ce manuel, il peut ne pas fonctionner correctement et peut mettre en danger l'utilisateur.*

CAUTION: Make sure that all the connecting pipework is water tight.

ATTENTION: *S'assurer que tous les raccordements sont étanches.*

CAUTION: When making the water connections, make sure that the backflow preventer connecting pipework is not mechanically over-stressed. Over time this could cause breakages, with consequent water losses which, in turn, could cause harm to property and/or people.

ATTENTION: *Lorsque vous effectuez les raccordements d'eau, assurez-vous que la tuyauterie reliant disconnecteur n'est pas mécaniquement des overstressed. Au fil du temps, ceci pourrait causer des ruptures, avec pour conséquence des pertes en eau qui, à leur tour, peuvent causer des dommages à la propriété et/ou les gens.*

CAUTION: Water temperatures higher than 100°F can be dangerous. During the installation, commissioning and maintenance of the backflow preventer, take the necessary precautions to ensure that such temperatures do not endanger people.

ATTENTION: *Les températures de l'eau supérieure à 100°F peut être dangereux. Au cours de l'installation, mise en service et l'entretien de la disconnecteur, prendre les précautions nécessaires afin de s'assurer que de telles températures ne compromettent pas les gens.*

CAUTION: In the case of highly aggressive water, arrangements must be made to treat the water before it enters the backflow preventer, in accordance with current legislation. Otherwise the valve may be damaged and will not operate correctly.

ATTENTION: *Dans le cas de l'eau fortement agressifs, des dispositions doivent être prises pour traiter l'eau avant qu'elle ne pénètre dans le disconnecteur, conformément à la législation actuelle. Sinon la soupape pourrait être endommagée et ne fonctionnent pas correctement.*

LEAVE THIS MANUAL FOR THE USER
LAISSEZ CE MANUEL AVEC L'UTILISATEUR

Principle of operation

The backflow preventer consists of two check valves (4) and (5), a chamber known as "reduced pressure area" (B) and of a discharge valve connected to the latter (3). The water entering the backflow preventer opens the upstream check valve (4) and at the same time through the channel (1) acts on the diaphragm (2) which closes the discharge valve (3) by means of the rod and then opens the downstream check valve. The pressure in the intermediate chamber under normal operating conditions is always less than the upstream pressure by at least 2 psi (140 mbar) as a result of a pre-calculated pressure loss on the first check valve. This difference in pressure Δp between the upstream (A) and intermediate (B) areas can be specified on a safety basis so that in the event of damage occuring, or a vacuum, the discharge valve is opened when the upstream pressure is still greater than the pressure in the intermediate area by at least 2 psi (140 mbar). In the event of damage to the diaphragm, the safety gasket under the thrust of the contrast spring (3) prevents the return of water upstream from the discharge since there is no more Δp equilibrium between the two areas.

NOTE: For the 1 1/4" and 1 1/2" models, to ensure correct operation the air must be released in the upper part of the diaphragm by means of the relief screw (6).

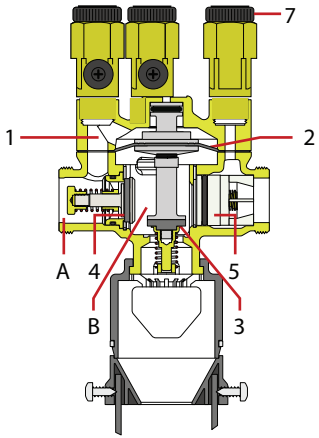

1/2" models

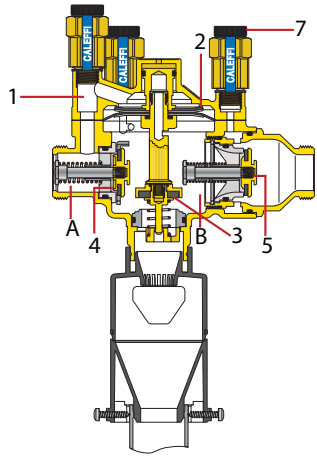

3/4", 1" models

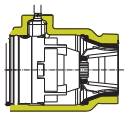

1" model downstream check valve detail

These models include factory assembled inlet and outlet isolation/shut-off ball valves, not pictured. Item 7 for 1/2" and 3/4" size is black in color. For 1" and 1 1/4" these are white.

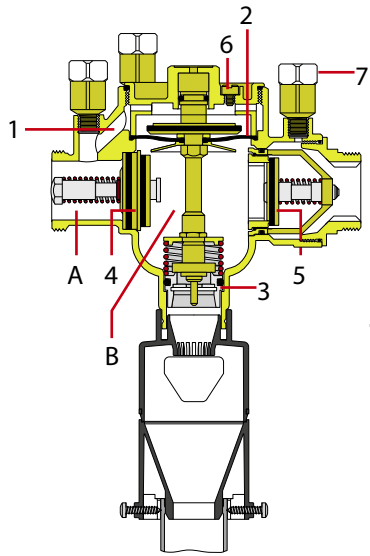

1 1/4" model

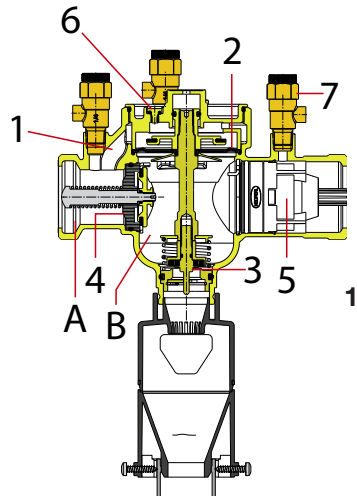

1 1/2" model

Factory assembled inlet and outlet isolation/shut-off ball valves are not pictured here.

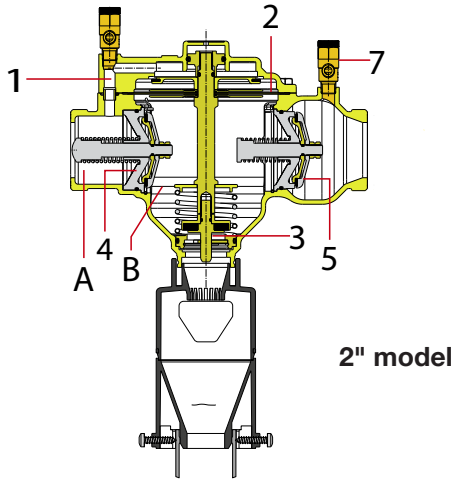

Factory assembled inlet and outlet isolation/shut-off ball valves are not pictured here.

Installation

The installation of 574 series FlowShield RP backflow preventer should only be carried out by qualified personnel in accordance with applicable codes and regulations.

It includes an upstream and downstream shut-off valve.

Install the unit in an accessible area which is not susceptible to accidental flooding. The equipment is to be installed horizontally only. The air gap, must be connected in accordance with local codes. See page 16 through 20 for discharge extension pipe size and type, sourced separately.

Before installing the backflow preventer the pipe should be cleaned with a high-capacity water jet.

In order to protect the public supply system the backflow preventer is installed after the water meter and, to protect supplies for sanitary purposes in the internal system, it is installed where contamination can take place, eg: centralized heating systems, garden watering systems etc.

Scan to view

574 Backflow Preventer

Installation Tip

Installation diagram

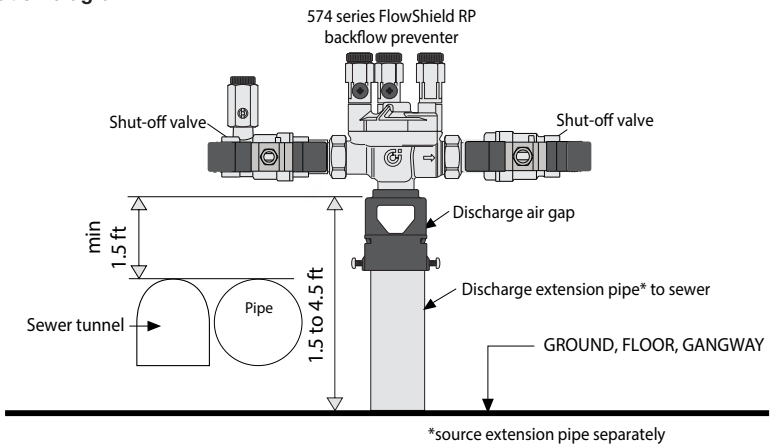

Maintenance

Since the backflow preventer valve is used to ensure the safety of domestic water supplies it must be inspected per local codes. The first sign that the equipment is not functioning properly, generally associated with the presence of sand or other impurities is indicated by a permanent leakage through the discharge. This loss is just an initial warning sign and does not completely jeopardize the safety of the check mechanism but means that the unit should be dismantled and the equipment should be cleaned. A rapid inspection method, which should take less than 15 minutes is described in the table below.

In the event of dripping at the discharge it is recommended to create strong circulation flow for a few minutes by opening one or more taps. This is usually sufficient to flush out any sand or other impurities to restore normal operation.

Dimensions

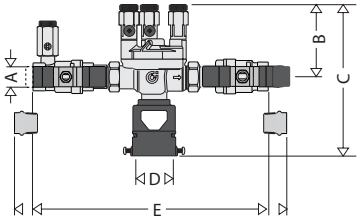

½"

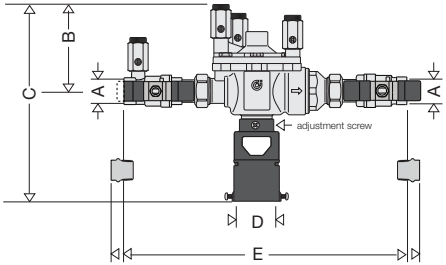

¾" , 1"

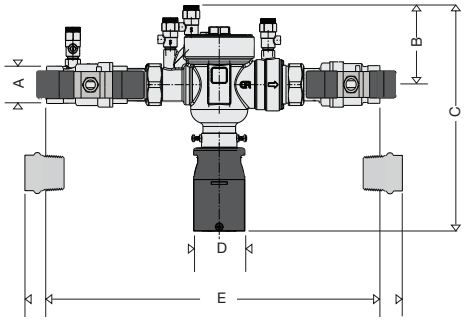

1 ¼"

Code	A	B	C	D	E	Wt (lb)
574004A	½" FNPT	3¼"	6¼"	40 mm	9¾"	5.0
574064A	½" press*	3¼"	6¼"	40 mm	12 3/8"	5.1
574050A	¾" FNPT	4"	10½"	40-60 mm	13¼"	9.5
574056A	¾" press*	4"	10½"	40-60 mm	16½"	9.6
574006A	1" FNPT	4"	10½"	40-60 mm	14"	9.5
574066A	1" press*	4"	10½"	40-60 mm	17¾"	9.6
574700A	1¼" FNPT	4"	11½"	40-60 mm	16½"	13
574706A	1¼" press*	4"	11½"	40-60 mm	20¼"	13

*Lay length:
½" press: 10 7/8".
¾" press: 14 ½"
1" press: 15 7/8"
1¼" press: 18 ¼"

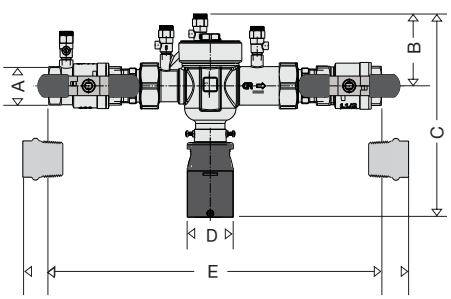

1 ½"

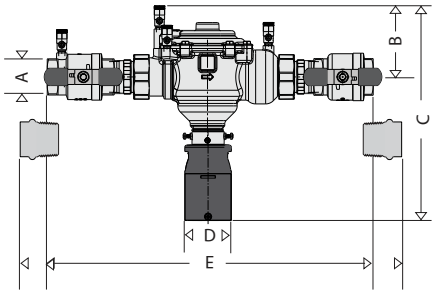

2"

Code	A	B	C	D	E	Wt (lb)
574801A	1½" FNPT	4"	11 1/16"	40-60 mm	18¾"	15
574806A	1½" press*	4"	11 1/16"	40-60 mm	23 3/8"	17
574900A	2" FNPT	5 3/16"	14½"	40-60 mm	23¾"	25
574906A	2" press*	5 3/16"	14½"	40-60 mm	33¾"	27

*Lay length:
1½" press: 20 3/8"
2" press: 31 1/16"

Hydraulic Characteristics

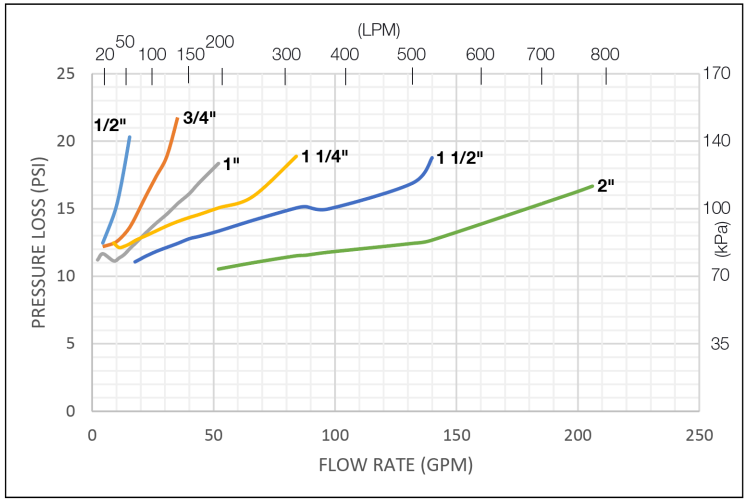

(LPM)

RAPID INSPECTION PROCEDURE

OPERATION	DEFECT DETECTED	CAUSE	REQUIRED ACTION
Close downstream shut-off valve	-Permanent leakage -No leakage	Upstream valve or discharge valve leaking	Dismantle and inspect
Close upstream shut-off valve and open upstream pressure control cock	-Discharge does not open. Leakage is minimal and lasts more than 1 minutes. -Discharge opens abruptly, emptying in less than 1 minute.	Discharge blocked	Dismantle and inspect
Open downstream shut-off valve	-Continuous discharge -No discharge	Downstream valve leaking	Dismantle and inspect. Put back into operation.

Procedure for examining internal parts

(½", ¾" and 1")

The following illustrations show the required operations to inspect the functional inner parts of the backflow preventer, sizes ½", ¾" and 1" .

1. Release the pressure by unscewing the pressure test ports. Remove the cover bolts.

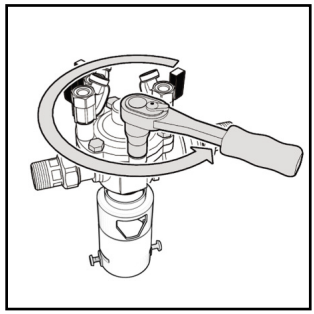

2. Pull out the core assembly and spring.

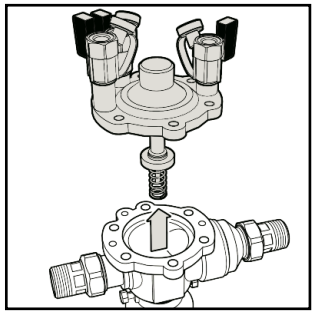

3. Pull out the seat of the discharge valve by pushing it from the outside while handling it with care so as not to damage it. Caution: If it should not be removed, protect it from possible damage which could result from changing the check valves.

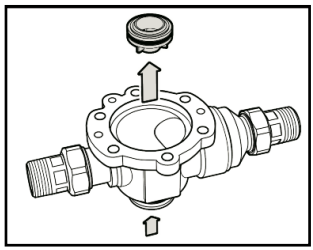

4. Remove the split rings holding the check valves in place with a pair of long-nose pliers.

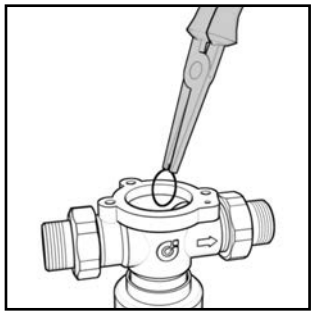

5. Remove the upstream and downstream check valves using a common pipe wrench or suitable size pliers.



6. After examination and after replacing any necessary components when reinstalling the check valves make sure the split rings are perfectly located in the seat.



Procedure for examining internal parts

(1¼")

The following illustrations show the required operations to inspect the functional inner parts of the backflow preventer, size 1¼" .

1. Release the pressure by unscewing the pressure test ports. Remove the cover .

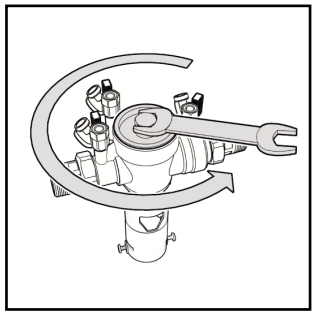

2. Pull out the core assembly and spring.

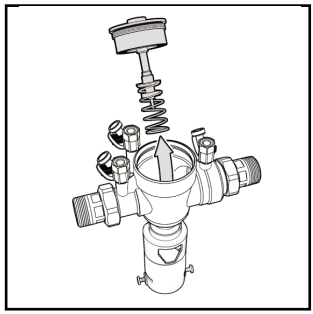

3. Pull out the seat of the discharge valve by pushing it from the outside while handling it with care so as not to damage it. Caution: If it should not be removed, protect it from possible damage which could result from changing the check valves.

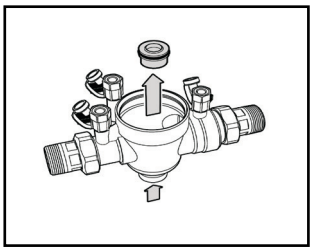

4. Remove the split rings holding the check valves in place with a pair of long-nose pliers.

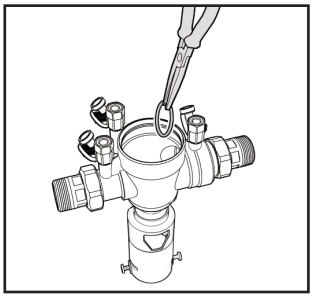

5. Remove the upstream and downstream check valves using a common pipe wrench or suitable size pliers.

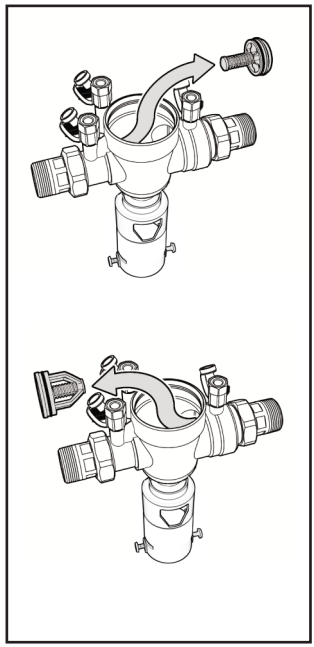

6. After examination and after replacing any necessary components when reinstalling the check valves make sure the split rings are perfectly located in the seat.

7. To close the backflow preventer, step backwards through steps 3 and 2. Place the threaded connection correctly into its seat. Press the central rod through with a pointed tool, and fully screw the cover in place with a hexagonal wrench while firmly holding in place.

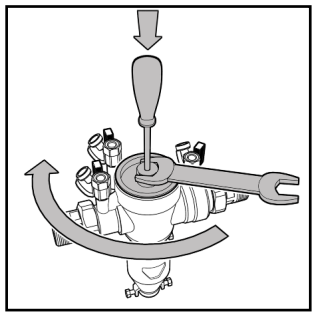

Procedure for examining internal parts

(1½" and 2")

The following illustrations show the required operations to inspect the functional inner parts of the backflow preventer, sizes 1½" and 2" .

1. Release the pressure by unscewing the pressure test ports. Remove the cover bolts.

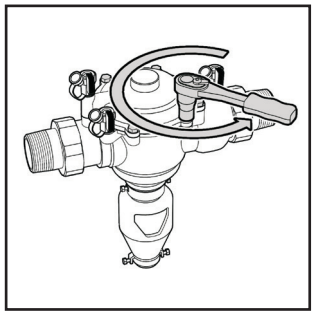

2. Pull out the core assembly and spring.

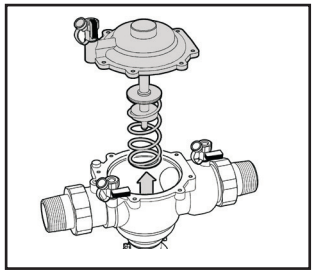

3. Pull out the seat of the discharge valve by pushing it from the outside while handling it with care so as not to damage it. Caution: If it should not be removed, protect it from possible damage which could result from changing the check valves.

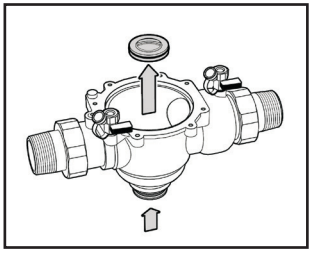

4. Remove the split rings holding the check valves in place with a pair of long-nose pliers.

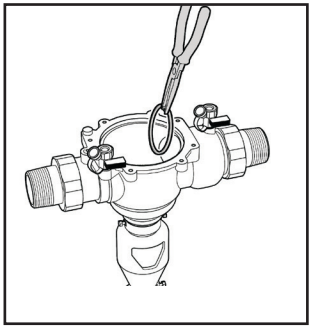

5. Remove the upstream and downstream check valves using a common pipe wrench or suitable size pliers.

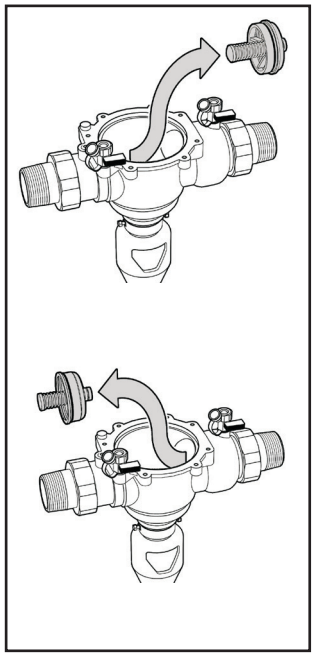

6. After examination and after replacing any necessary components when reinstalling the check valves make sure the split rings are perfectly located in the seat.

574004A
574064A
(½")

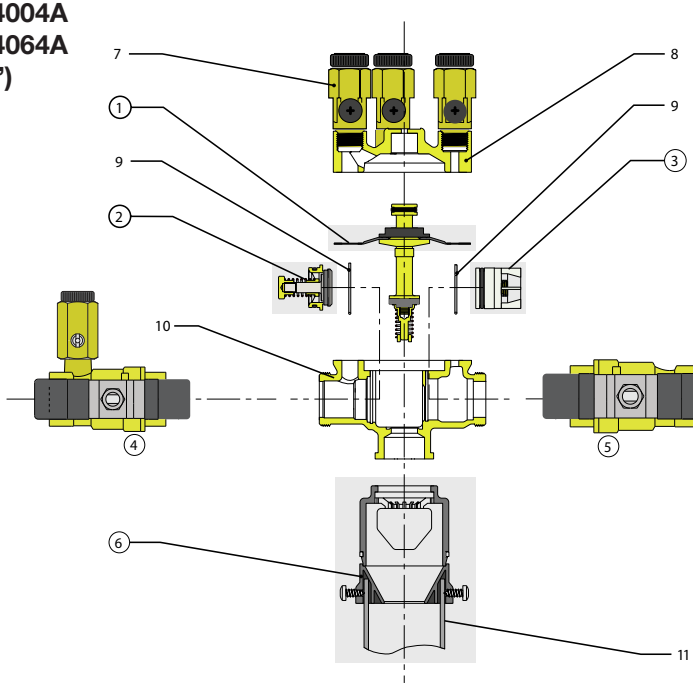

1	Discharge assembly
2	Upstream check valve
3	Downstream check valve
4	Upstream ball valve*
5	Downstream ball valve
6	Air gap
7	Pressure test port
8	Inspection cover
9	Seal ring
10	Body
11	Discharge pipe**

* Comes complete with PT port
**1" PVC pipe, separately sourced.

Spare parts

Ref #	574004A 574064A	Backflow code #
1	59978	Spare part code #
2	59977	
3	F0002532	
4	F0001626	
5	F0001624	
6	59980	

For press models, press fittings are NPT male x Press, not shown above and not available from Caleffi. Source for modifying the NPT model, or to replace on press models, from any supply house. Be sure to use Loctite® to secure the threaded connection.

Equipment for annual inspection includes:
-upstream pressure gauge
-downstream pressure gauge
-differential pressure gauge
-flexible hoses and fittings

574050A
574056A
(¾")
574006A
574066A
(1")

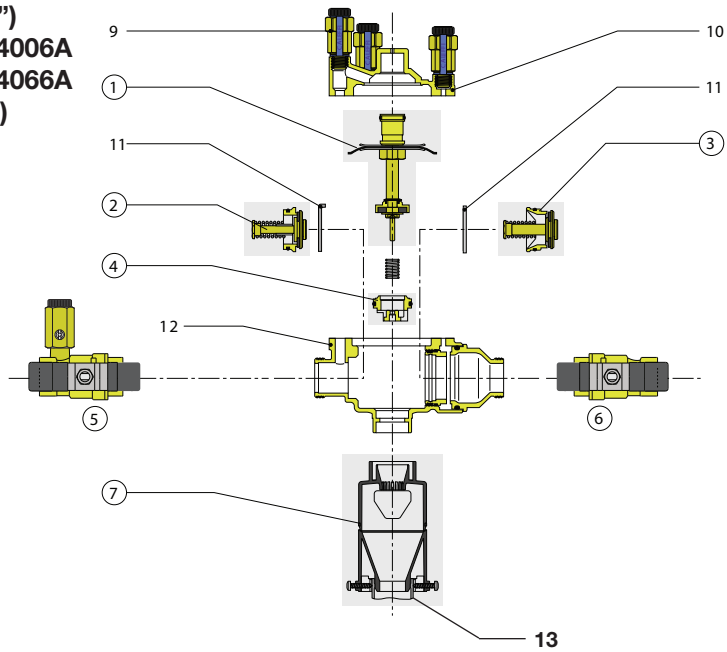

1	Discharge assembly
2	Upstream check valve
3	Downstream check valve
4	Discharge valve seat
5	Upstream ball valve*
6	Downstream ball valve
7	Air gap
9	Pressure test port
10	Inspection Cover
11	Split ring
12	Body
13	Discharge pipe**

* Comes complete with PT port
**2" PVC, separately sourced.

NOTE: Call out for part 8 does not apply to this size.

Spare parts

Ref #	574050A 574056A (¾")	574006A 574066A (1")	Back-flow code #
1	59471	59471	Spare part code #
2	59469	59469	
3	59470	F0001637	
4	59472	59472	
5	F0001627	F0001628	
6	F0001625	F0001629	
7	39623	39623	

For press models, press fittings are NPT male x Press, not shown above and not available from Caleffi. Source for modifying the NPT model, or to replace on press models, from any supply house. Be sure to use Loctite® to secure the threaded connection.

Equipment for annual inspection includes:
-upstream pressure gauge
-downstream pressure gauge
-differential pressure gauge
-flexible hoses and fittings

574700A
574706A
(1 ¼")
574801A
574806A
(1 ½")

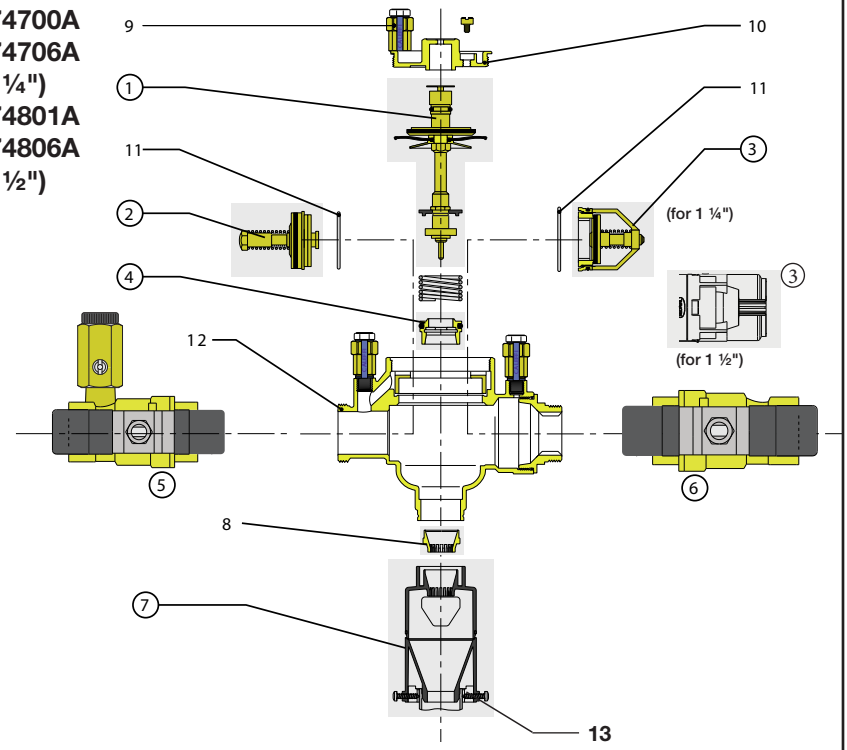

1	Discharge assembly
2	Upstream check valve
3	Downstream check valve
4	Discharge valve seat
5	Upstream ball valve*
6	Downstream ball valve
7	Air gap
8	Deflector
9	Pressure test port
10	Inspection Cover
11	Split ring
12	Body
13	Discharge pipe**

* Comes complete with PT port
**2" PVC, separately sourced.

Spare parts

Ref #	574700A 574706A	574801A 574806A	Back-flow code #
1	59457	59457	Spare part code #
2	59455	59455	
3	59456	F0001636	
4	59458	59458	
5	F0001631	F0001633	
6	F0001630	F0001632	
7	39623	39623	

For press models, press fittings are NPT male x Press, not shown above and not available from Caleffi. Source for modifying the NPT model, or to replace on press models, from any supply house. Be sure to use Loctite® to secure the threaded connection.

Equipment for annual inspection includes:
-upstream pressure gauge
-downstream pressure gauge
-differential pressure gauge
-flexible hoses and fittings

574900A
574906A
(2")

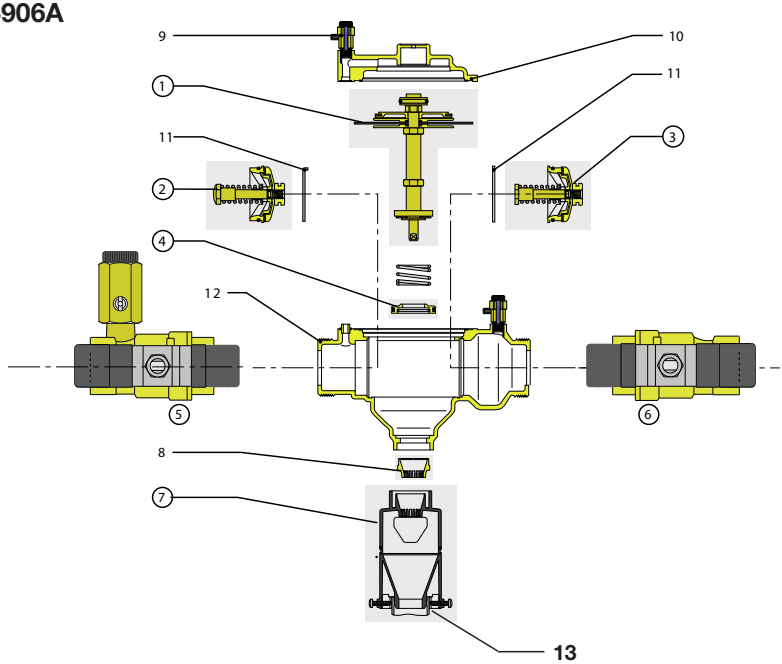

1	Discharge assembly
2	Upstream check valve
3	Downstream check valve
4	Discharge valve seat
5	Upstream ball valve*
6	Downstream ball valve
7	Air gap
8	Deflector
9	Pressure test port
10	Inspection Cover
11	Split ring
12	Body
13	Discharge pipe***

* Comes complete with PT port
**2" PVC, separately sourced.

Equipment for annual inspection includes:
-upstream pressure gauge
-downstream pressure gauge
-differential pressure gauge
-flexible hoses and fittings

Spare parts

Ref #	574900A 574906A	Back-flow code #
1	59461	Spare part code #
2	59459	
3	59460	
4	59462	
5	F0001635	
6	F0001634	
7	31872	
8	31875	

For press models, press fittings are NPT male x Press, not shown above and not available from Caleffi. Source for modifying the NPT model, or to replace on press models, from any supply house. Be sure to use Loctite® to secure the threaded connection.

NOTES

LEAVE THIS MANUAL WITH THE USER.

Laissez ce manuel à la disposition de l'utilisateur.

CALEFFI
Hydronic Solutions

Caleffi North America, Inc.
3883 West Milwaukee Road
Milwaukee, WI 53208
T: 414.238.2360 F: 414.238.2366

11-2025

For Technical Support call 1-414-338-6338, or email techsupport.us@caleffi.com