PFISTER

Hanover™

Pull-Down Kitchen Faucet

F531-4HNY Finish*(Y)* ❑

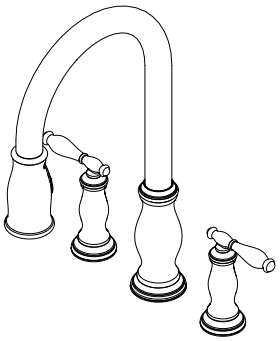

- AccuDock Sprayhead Docking
- Swivel Spout
- Pforever Seal

Specifications

Features

- 60" Nylon Hose
- 2 Function Pull-Down Sprayer
- AccuDock Spray Head Docking
- Swivel Spout
- Mounting Hardware Included
- Soap Dispenser Included
- Fixed Hub
- Pfast Connect
- High Arc Spout
- Quick Install Tool
- Pforever Seal Ceramic Disc Valve
- Pforever Warranty®

Code Compliance

Pfister products are designed and manufactured in compliance with the following standards and codes:

- IAPMO Certified
- CSA B125 Certified
- ASME A112.18.1
- NSF 61/9 Annex G (Low lead)
- ADA Compliant-ANSI A117.1 (Lever handles only)

Dimensions

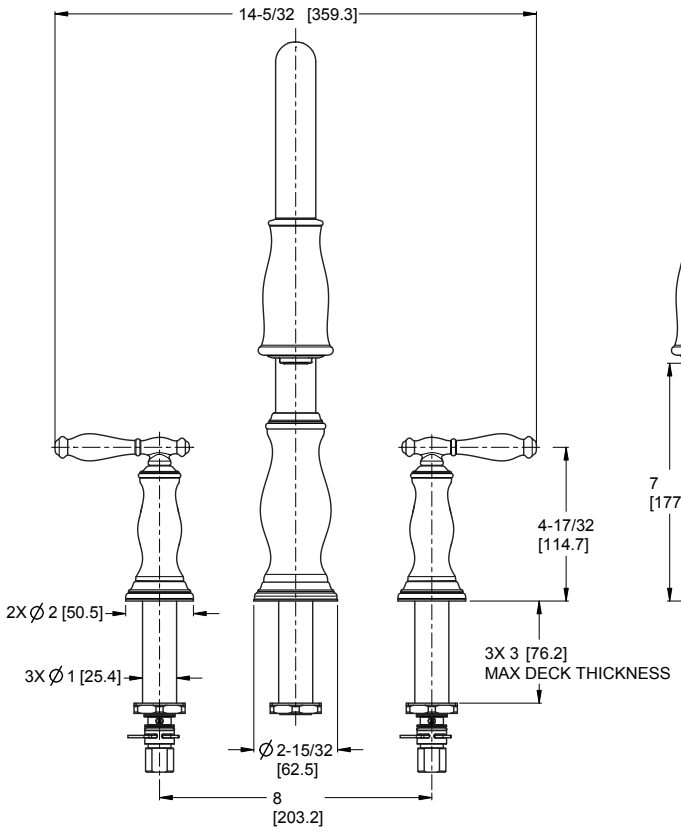

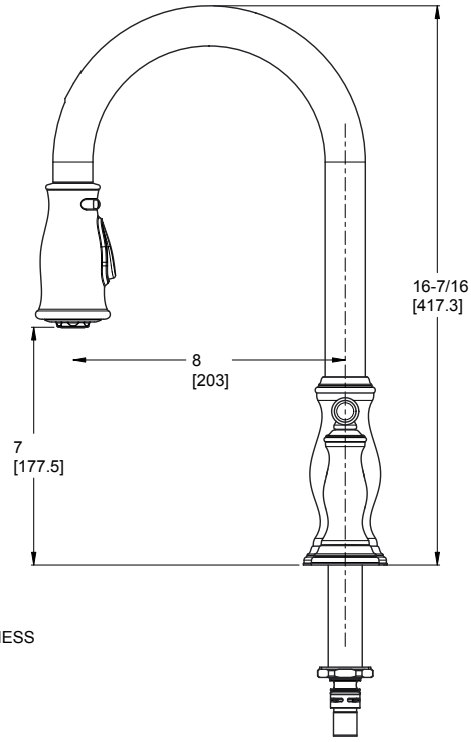

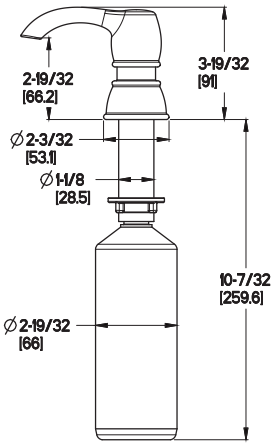

Top Filling Soap Dispenser

Ø1-3/8 Min to Ø1-1/2 Max. Deck Hole Openings

Copyright © 2015, Pfister Inc.