AquaSense®

ZTR Series

Automatic Sensor-Operated Piston Type Flushometer for Water Closets and Urinals

Installation, Operation, Maintenance and Parts Manual



Water Closet Models:

ZTR6200-ONE 1.1 gpf
ZTR6200EV 1.28 gpf
ZTR6200-WS1 1.6 gpf

Urinal Models:

ZTR6203-ULF 0.125 gpf
ZTR6203-QRT 0.25 gpf
ZTR6203-EWS 0.5 gpf
ZTR6203-WS1 1.0 gpf

ADA DESIGNED

Power Options:

Battery (Standard)
-LL (Long Life Battery)
-HW (Hardwired using 7.6 VDC Power Supply Input)

⚠ **WARNING**: Cancer and Reproductive Harm - www.P65Warnings.ca.gov
⚠ **ADVERTENCIA:** Cáncer y daño reproductivo - www.P65Warnings.ca.gov
⚠ **AVERTISSEMENT:** Cancer et effets néfastes sur la reproduction - www.P65Warnings.ca.gov

LIMITED WARRANTY

All goods sold hereunder are warranted to be free from defects in material and factory workmanship for a period of three years from the date of purchase. Decorative finishes warranted for one year. We will replace at no costs goods that prove defective provided we are notified in writing of such defect and the goods are returned to us prepaid at Sanford, NC, with evidence that they have been properly maintained and used in accordance with instructions. We shall not be responsible for any labor charges or any loss, injury or damages whatsoever, including incidental or consequential damages. The sole and exclusive remedy shall be limited to the replacement of the defective goods. Before installation and use, the purchaser shall determine the suitability of the product for his intended use and the purchaser assumes all risk and liability whatever in connection therewith. Where permitted by law, the implied warranty of merchantability is expressly excluded. If the products sold hereunder are “consumer products,” the implied warranty of merchantability is limited to a period of three years and shall be limited solely to the replacement of the defective goods. All weights stated in our catalogs and lists are approximate and are not guaranteed.

NOTICE: READ ENTIRE MANUAL PRIOR TO INSTALLING PRODUCT

ZTR Series Flush Valve Package Contents

ZTR6200

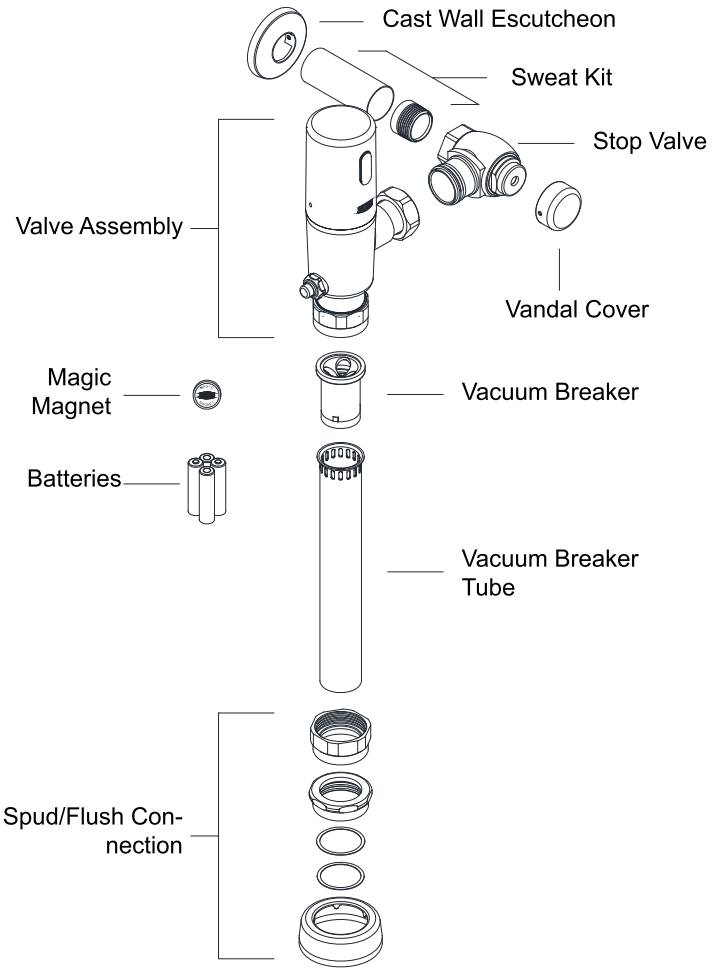

ZTR6203

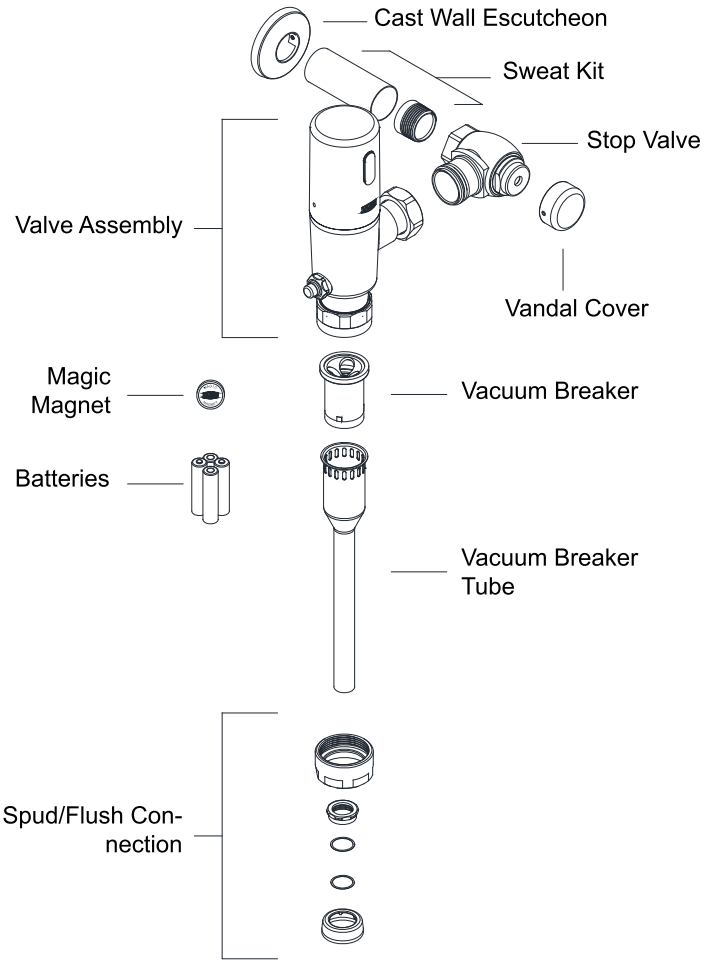

Required Tools

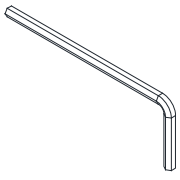

3/32”, 5/64”
Allen Wrench
(Supplied)

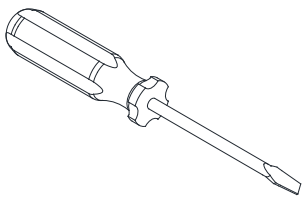

Flat Head
Screwdriver

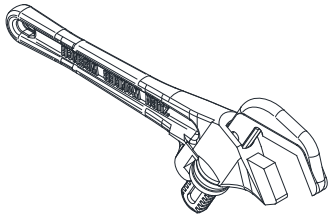

Non-toothed
Wrench

Overview:

Zurn Aqua-Sense® ZTR Series Flushometer offers two models (closet/urinal) in a variety of flow rates. The ZTR design is a chrome plated brass body with an automatic sensor-operated piston-type valve. The flushometer incorporates a filtered bypass, high back pressure vacuum breaker, adjustable tailpiece, spud coupling, flange for top spud connection and a mechanical override pushbutton (MOB) for alternative flushing methods. The control stop has internal siphon-guard protection, vandal resistant stop cap, sweat solder kit, and cast wall flange with set screw. All internal and external gaskets and seals are chloramine resistant.

Specifications:

Voltage:	6 VDC Series [4 “AA” (Alkaline or Lithium) and/or external power option]
Sensor Range:	Factory set for user at end of elongated bowl or field adjustable by installer

Important Safety Information:

- Installer is responsible for ensuring the product is installed and conforms to all plumbing codes and ordinances.
- Do not convert or modify this Zurn product yourself. All warranties will be voided.
- Water supply lines must be sized according to building designer in order to provide adequate water supply for each fixture.
- Flush all water lines prior to making connections.

Prior to Installation:

Before installing your Zurn® Aqua-FIT® Faucet: the items listed below should already be installed on site.

- The ZTR flushometer is designed to operate optimally with the fixture between 35 to 80 psi (241 to 552 kPa) of running water pressure.
- When installing a flushometer, it is important that the flush volume matches the requirements of the plumbing fixture.
- To protect chrome finish, do not use toothed tools to install or service the flushometer.

<u>NOTE</u>: The information in this manual is subject to change at any time without notice. Installations may be performed at different times of construction by different individuals. For this reason, these instructions should be left on-site with the facility or maintenance manager.

Sweat Solder Adapter Installation Instructions - STEP 1

NOTE: Before installation, turn off water supplies to existing fixture and remove flushometer if replacing an existing device.

STEP 1.1
Measure distance from finished wall to the center line of the fixture spud. If necessary, cut water supply pipe 1-1/4" shorter than this measurement. Deburr by chamfering O.D. and I.D of end of water supply pipe.

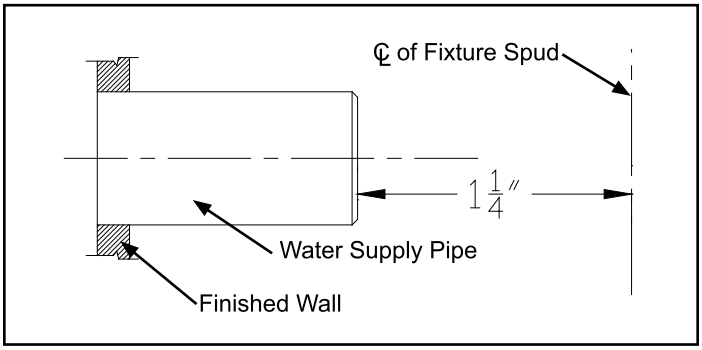

STEP 1.2
Slide threaded sweat solder adapter onto water supply pipe until shoulder stops on end of pipe. Then sweat-solder the adapter to water supply pipe.

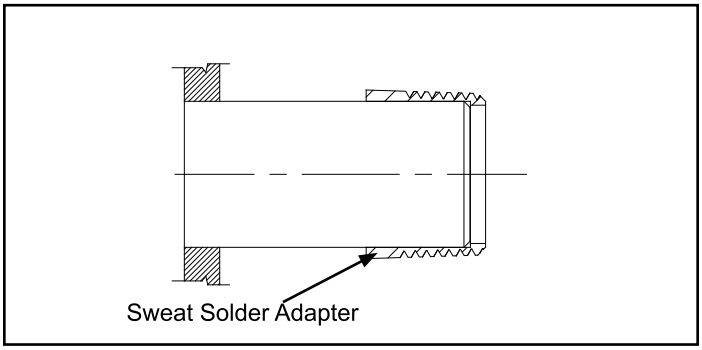

STEP 1.3
Measure distance from finished wall to first thread of sweat solder adapter. If necessary, cut chrome cover tube this length.

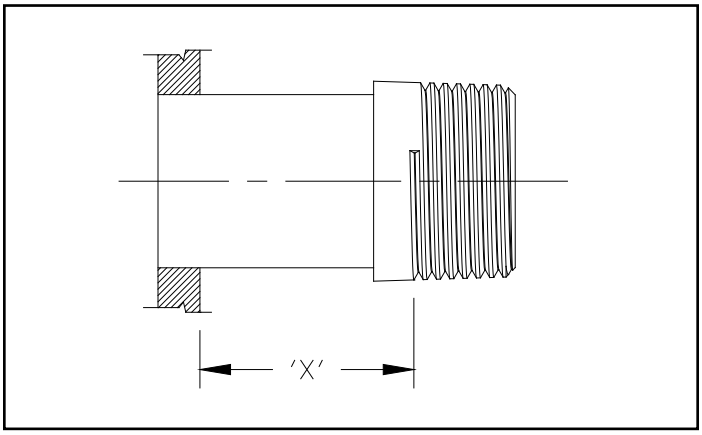

STEP 1.4
Slide wall escutcheon over chrome cover tube and slide both items over water supply pipe. Press wall escutcheon flush against finished wall and tighten set screw with hex wrench (supplied) to secure it in place.

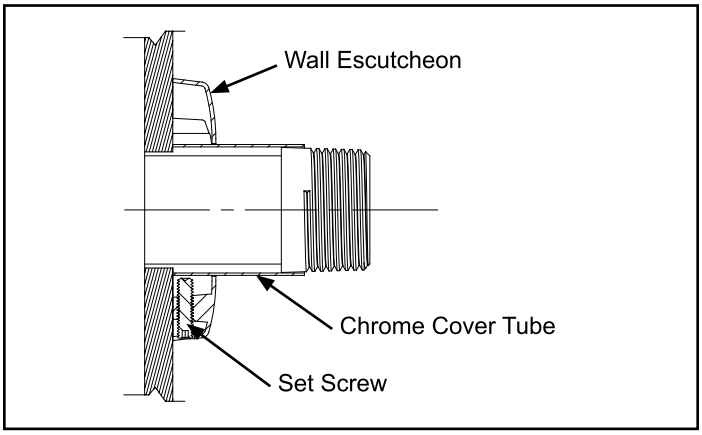

Control Stop Installation Instructions - STEP 2

STEP 2.1
Install control stop assembly by threading it onto water supply pipe and tightening with a smooth jawed wrench. Apply thread sealing compound or pipe tape to male NPT thread on sweat solder adapter only.

Prior to turning on main water supply line ensure all stop valves are closed off tight by using a flathead screwdriver and turning the stop valve adjustment screw clockwise.

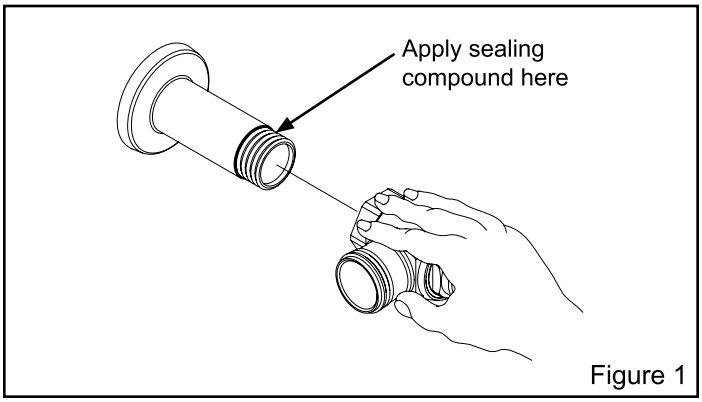

Figure 1

STEP 2.2
When all stop valves are properly connected to the water supply line and water pressure is available open the control stop using a flathead screwdriver and turning the stop valve adjustment screw counterclockwise.

Allow the water supply line to flush any debris or sediment that may be present in the line.
Close the control stop once the lines are completely flushed.

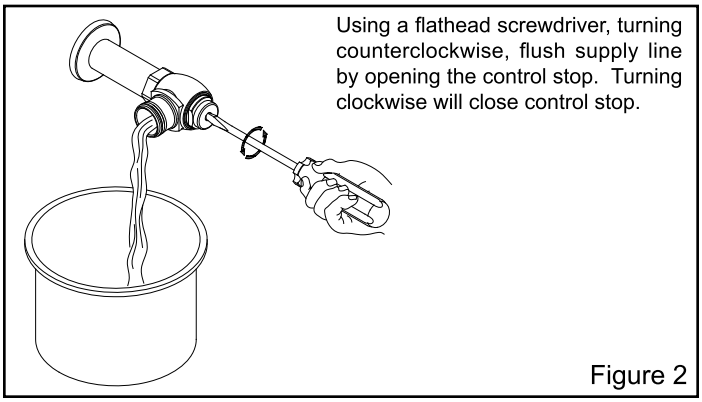

Figure 2

Flush Valve Installation - STEP 3

STEP 3.1
Prior to attaching flush valve to control stop(A) inspect and verify that the O-ring (C) is located within the O-ring groove at the tailpiece. Ensure the locking nut (D) and locking snap ring (E) are also present on the tailpiece. See Figure 3.

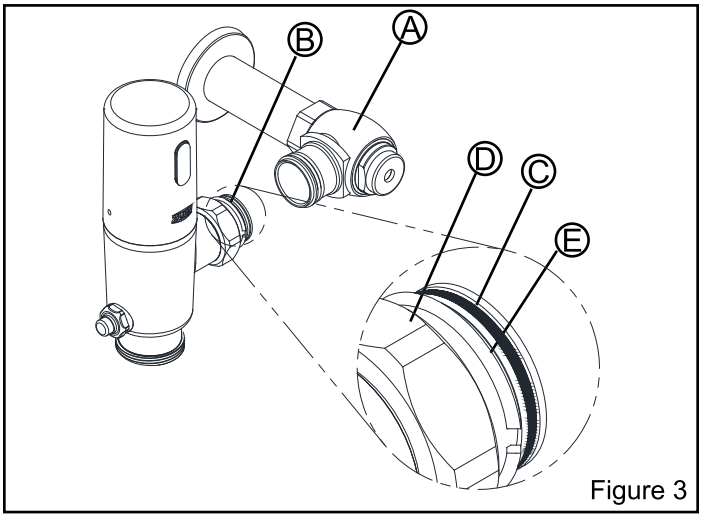

Figure 3

STEP 3.2
Lubricate O-ring with water if necessary and carefully insert flush valve tailpiece into the control stop valve to ensure O-ring remains seated. Tighten locking nut using a smooth jawed wrench. See Figure 4.

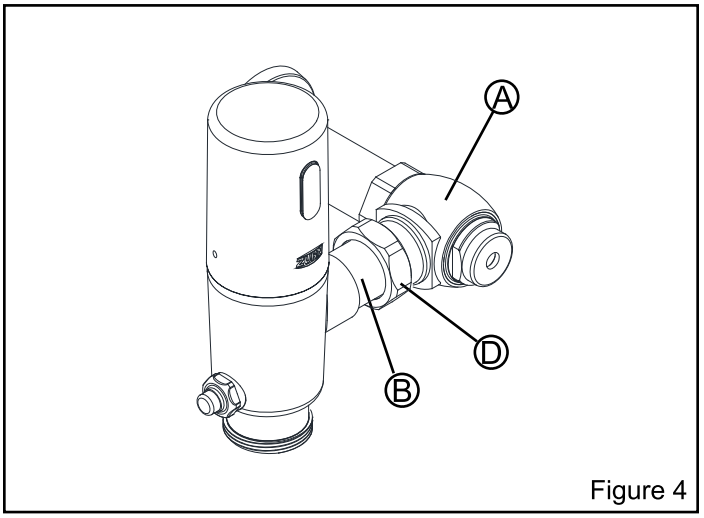

Figure 4

STEP 3.3
Determine the length of vacuum breaker tube required to join the flush valve and fixture spud, and cut if necessary. See Figure 5.

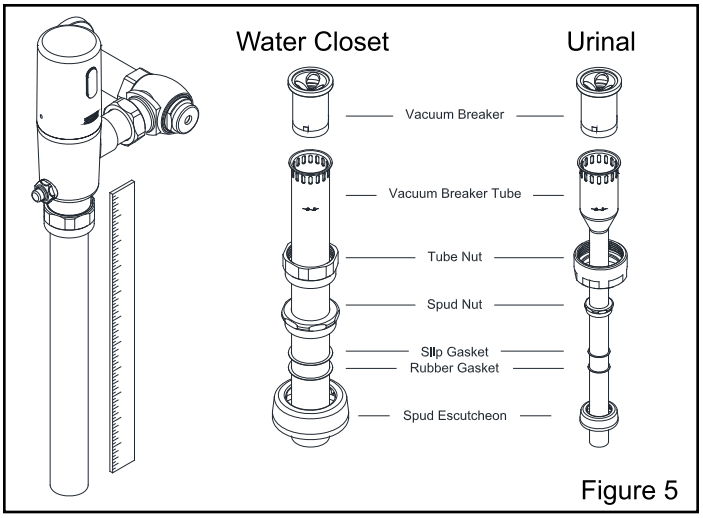

Figure 5

⚠ ***DO NOT*** *use pipe sealant or plumbing grease on any valve component or coupling with the exception of the Control Stop Inlet! Ensure Vacuum Breaker does not twist or warp when tightening Vacuum Breaker Tube Nut.*

STEP 3.4
Assemble and secure the vacuum breaker tube assembly and spud nut assembly to the flush valve and fixture spud by hand tightening the spud nut and vacuum breaker tube nut.

Adjust and plumb the valve assembly. Tighten all connections with smooth jawed wrench and turn on water supply at the control stop. See Figure 5.

⚠ ***DO NOT*** *cut vacuum breaker tube shorter than 6" below the -C-L- indicator mark, as vacuum breaker must be 6" above the fixture. Consult plumbing Codes & Regulations for specific details.*

Remove Sensor Cap (Applies to all versions) - STEP 4

STEP 4.1
Use the 3/32" Allen Wrench to loosen the internal set screw until it stops. Screw will retract into the base to eliminate loss.

STEP 4.2
Rotate cap clockwise and pull cap up to remove.

STEP 4.3
Disconnect black solenoid plug before accessing batteries.

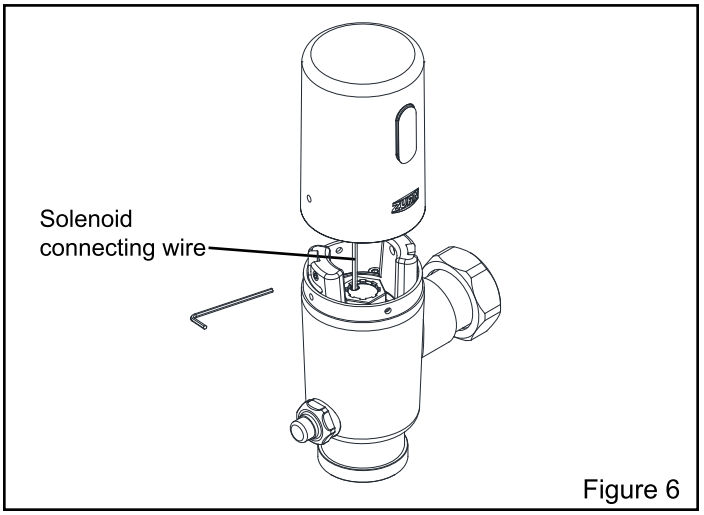

Figure 6

Battery Installation (Applies to battery and -LL versions only) - STEP 5A

STEP 5A.1
Remove sealed battery housing from sensor cap and remove top of sealed battery housing by loosening the knurled screw by hand or with a flat head screwdriver. Insert four batteries (supplied) into sealed battery housing and ensure the batteries are inserted in the correct orientation. Reattach top to the sealed battery housing.

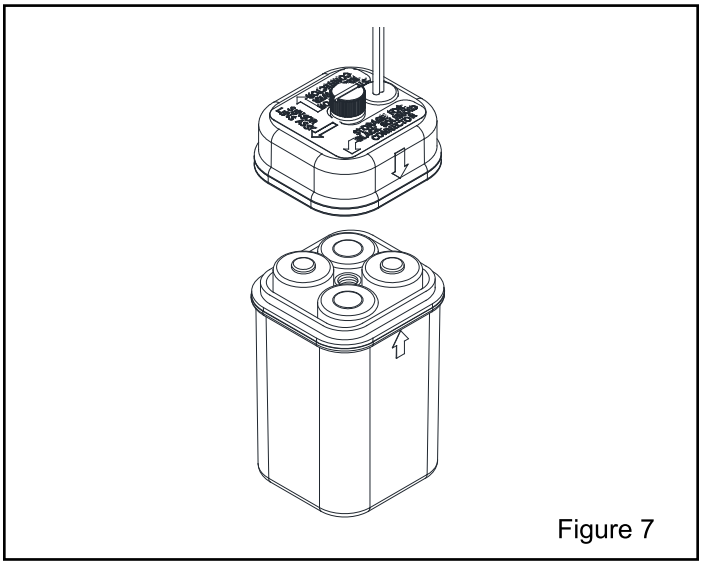
Figure 7

⚠ *Only use one battery type for installation. **DO NOT** mix and match Standard (Alkaline) and Long Life (Lithium) Batteries.*

STEP 5A.2
Connect sealed battery housing to sensor lens via **RED** connectors by aligning arrows and pressing together.

Insert sealed battery housing into sensor cap. Ensure sticker on top of sealed battery housing is oriented properly with the **WHITE** arrow pointing toward the sensor lens. See Figure 8.1.

Utilize open space within the sensor cap to store the connected RED power connectors and BLACK solenoid connectors. See Figure 8.2.

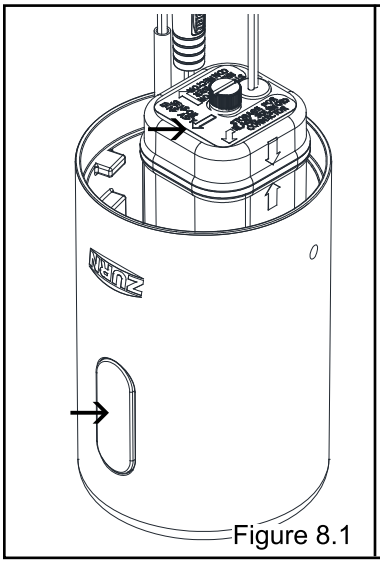
Figure 8.1

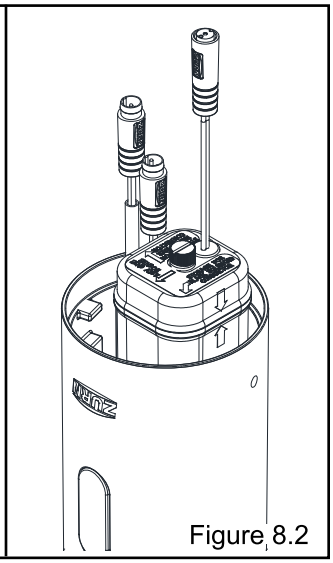
Figure 8.2

STEP 5A.3
Reattach the sensor cap and tighten cap screws.

Hardwire Installation (Applies to -HW versions only) - STEP 5B

STEP 5B.1
Route 10' power supply cable (supplied) through the wall escutcheon (supplied), wire supply tube (supplied) and the opening on the back of sensor cap.

Connect power supply cable to sensor lens via **RED** connectors by aligning arrows and pressing together.

Hand-tighten wire supply tube into the back of the sensor cap. Slide wall escutcheon along wire supply tube until it is against the sensor cap.

Reattach the sensor cap to the flushometer valve body while ensuring wire supply tube is properly inserted into thru-hole in wall.

Tighten the set screw using 3/32" Allen wrench to secure sensor cap. Slide wall escutcheon flush with wall and secure using set screw and Allen wrench (supplied).

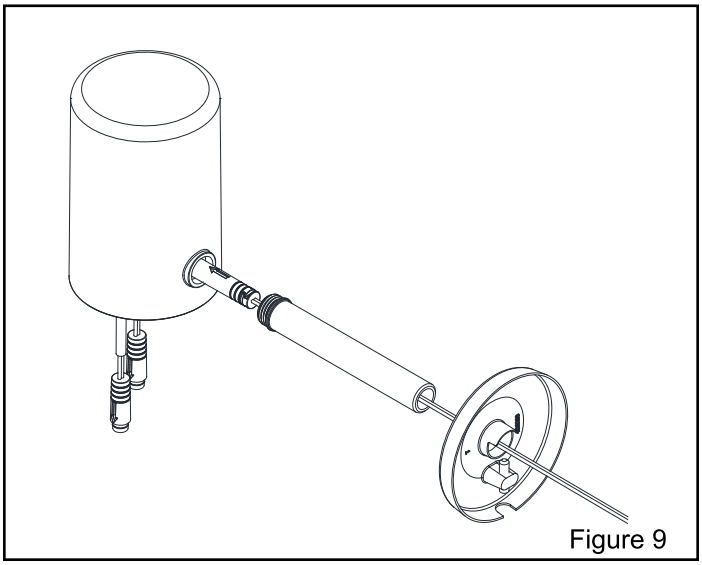
Figure 9

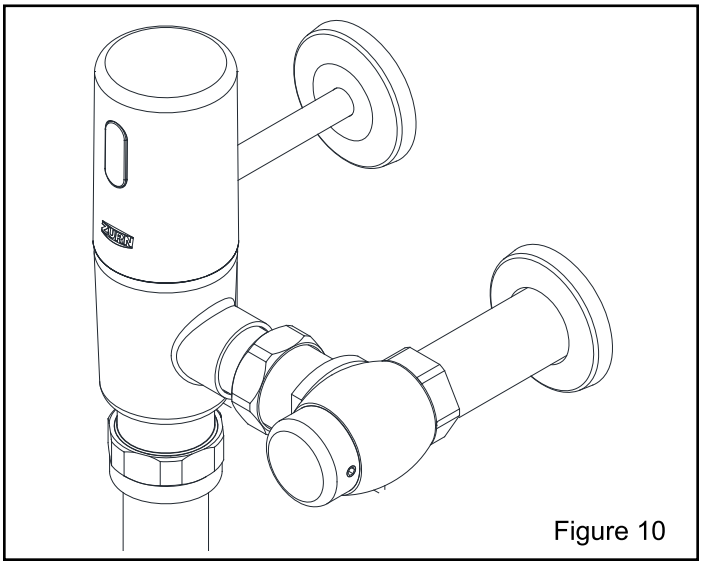
Figure 10

Connect ZTR-HW directly to HW6 Power Converter. (Recommended if one to two ZTR flush valves are powered by one HW6.)

STEP 5B.2
Cut **RED** power connector from end of power supply cable not connected to the Sensor Cap and strip back the wire insulation by minimum of 1/4".

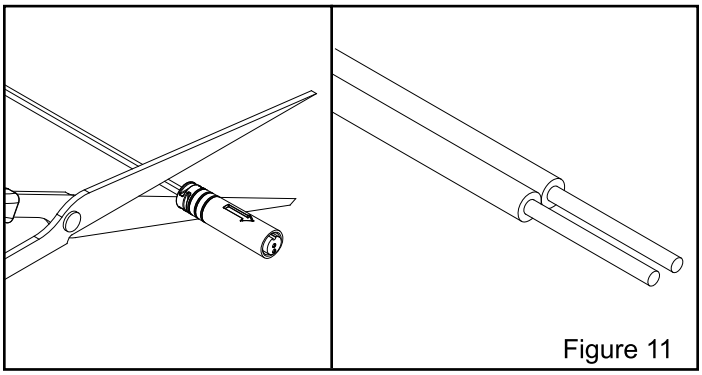

Figure 11

STEP 5B.3
Secure **RED** wire to Positive (+) and **BLACK** wire to Negative (-) screw terminals on HW6.

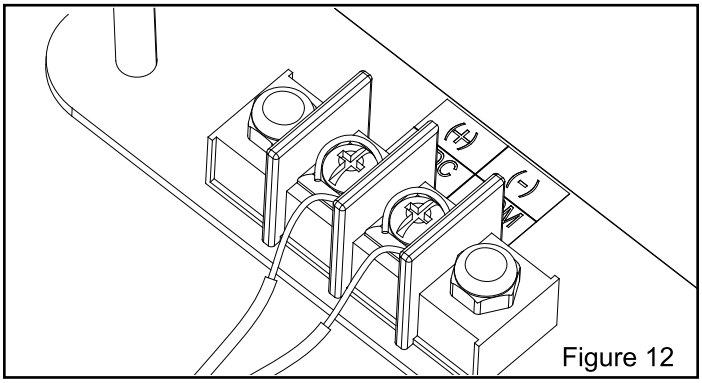

Figure 12

Optional Junction Box (recommended when three or more ZTR flush valves utilize one HW6)

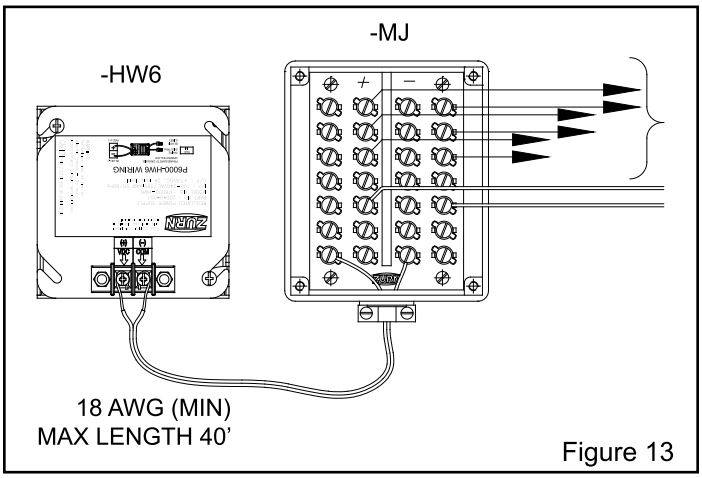

Figure 13

Metal Sensor Cap Retrofit Installation Instructions

STEP 6.1
Remove vandal-resistant cover with allen wrench from control stop (if present) and turn control stop clockwise to turn off the water supply.

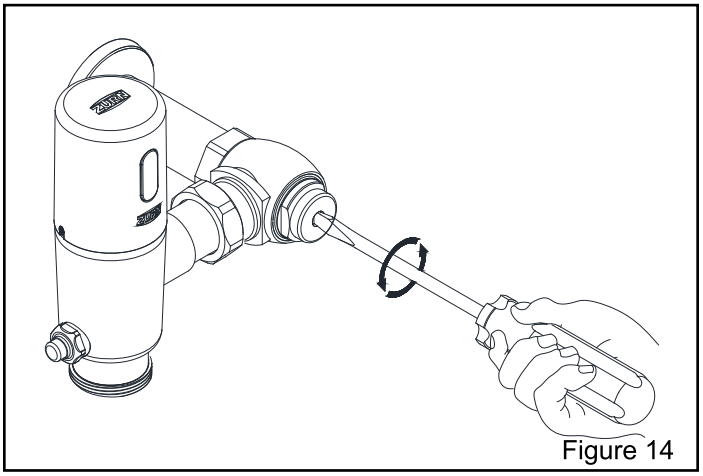
Figure 14

STEP 6.2
Press and hold the manual override button for 3 seconds to release any residual pressure.

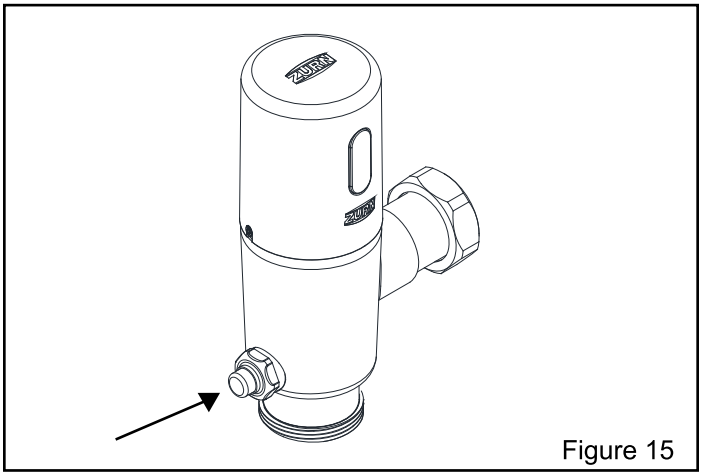
Figure 15

STEP 6.3 (For Hardwired Only)
Loosen set screw in wall escutcheon and slide escutcheon against the sensor cap

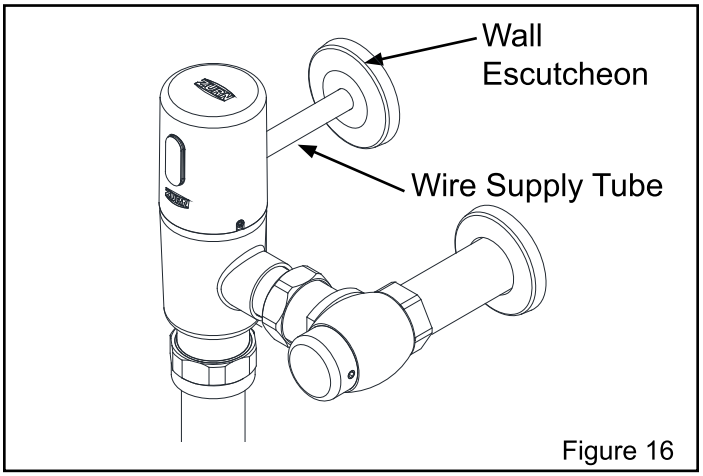

Figure 16

STEP 6.4
Use a 5/64” allen wrench to remove the two cap screws from the sensor cap and remove the sensor cap. See Figure 17. Disconnect black solenoid plug.

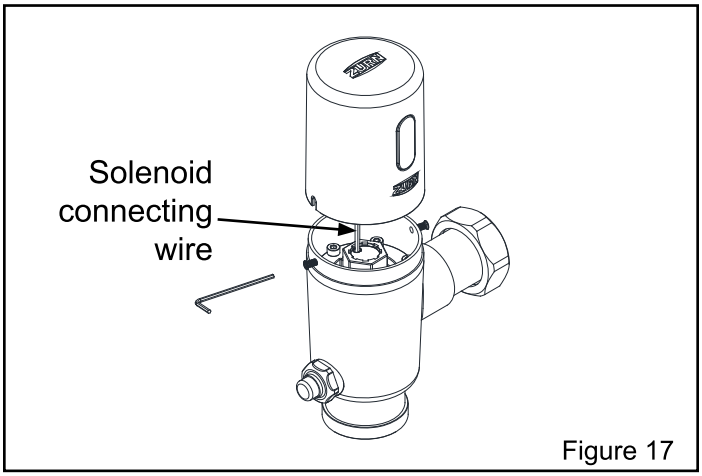

Figure 17

STEP 6.5 (For Hardwired Only)
Disconnect the red sensor plug and loosen the wire supply tube. Remove both the wire supply tube and escutcheon. Keep for metal sensor cap installation.

STEP 6.6
Remove the 4 sockets screws shown in Figure 18 using a M3 allen wrench and discard the screws

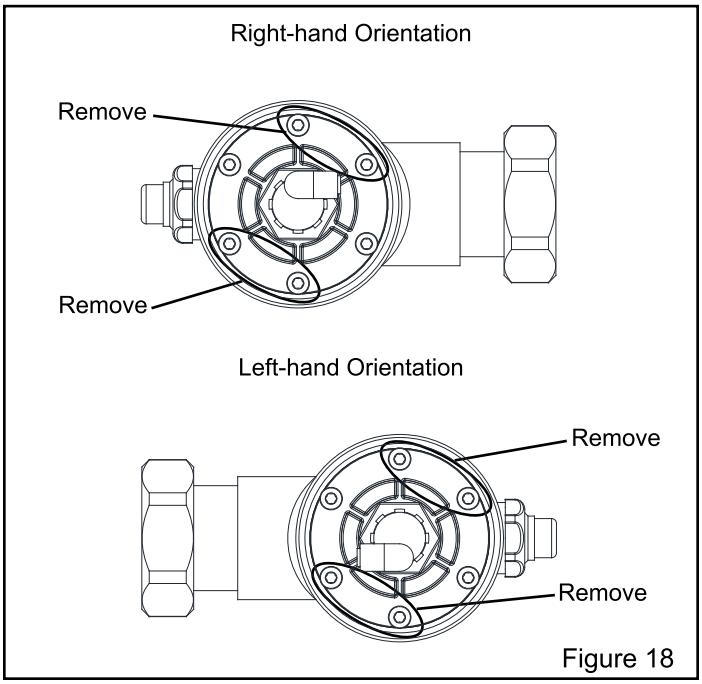

Figure 18

STEP 6.7
Note socket screw pockets in the ring insert and place over remaining 2 socket screws See Figure 19.

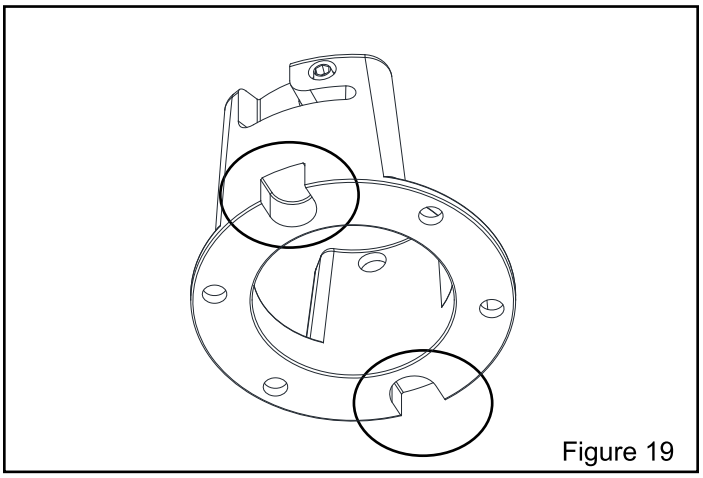
Figure 19

STEP 6.8
Ensure ring insert set screws align with valve body holes shown in Figure 20. Hand start the 4 new sockets screws(included) into the ring insert. Tighten screws in the torque sequence shown on Figure 21.

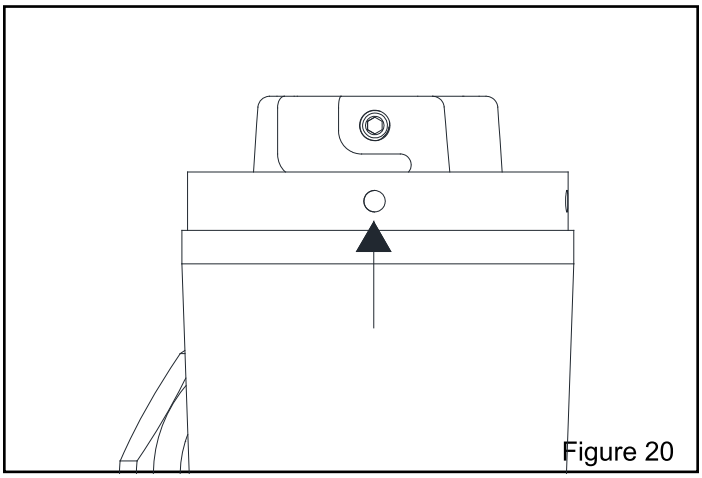
Figure 20

STEP 6.9
Remove sealed battery housing from sensor cap and remove top of sealed battery housing by loosening the knurled screw by hand or with a flat head screwdriver. Insert four batteries (supplied) into sealed battery housing and ensure the batteries are inserted in the correct orientation. Reattach top to the sealed battery bousing.

STEP 6.10
Connect sealed battery housing to sensor lens via **RED** connectors by aligning arrows and pressing together.

Insert sealed battery housing into sensor cap. Ensure sticker on top of sealed battery housing is oriented properly with the **WHITE** arrow pointing toward the sensor lens. See Figure 23.

Utilize open space within the sensor cap to store the connected RED power connectors and BLACK solenoid connectors per the sticker on the battery housing. See Figure 24.

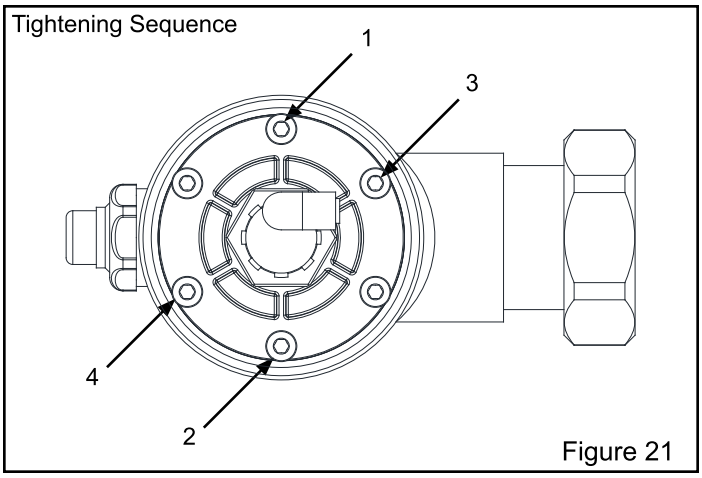

Figure 21

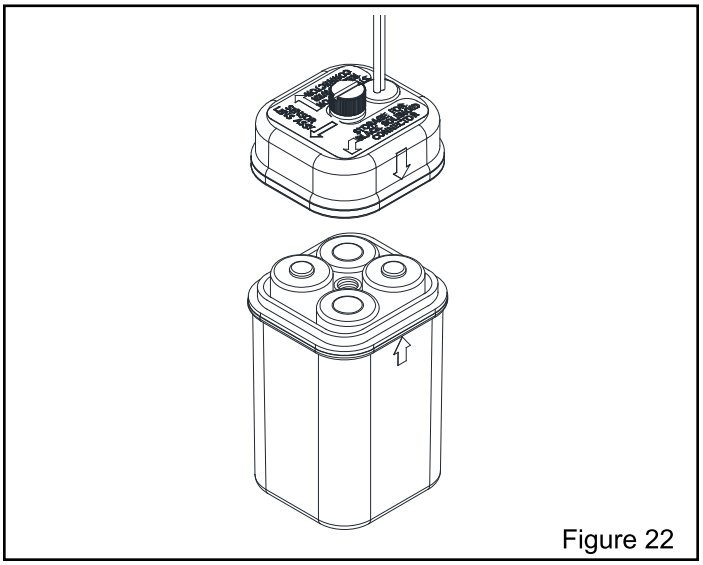
Figure 22

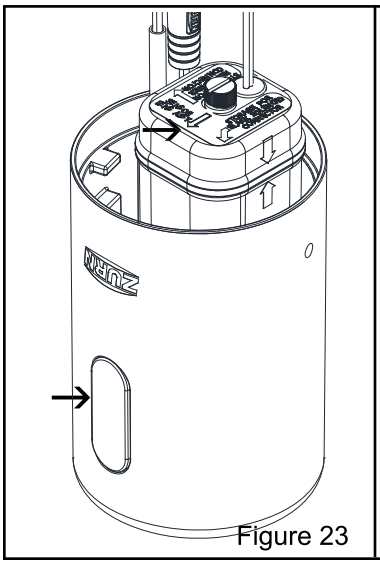
Figure 23

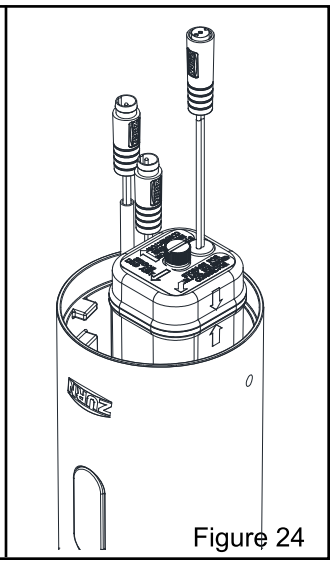
Figure 24

STEP 6.11 (For Hardwired Only)
Route 10' power supply cable throught the wall escutcheon, wire supply tube, and the opening on the back of the metal sensor cap.

Connect the power supply cable to the sensor lens via the **RED** connectors by aligning the arrows and pressing together.

Hand-tighten wire supply tube into the back of the sensor cap. Slide wall escutcheon along wire supply tube until it is against the sensor cap.

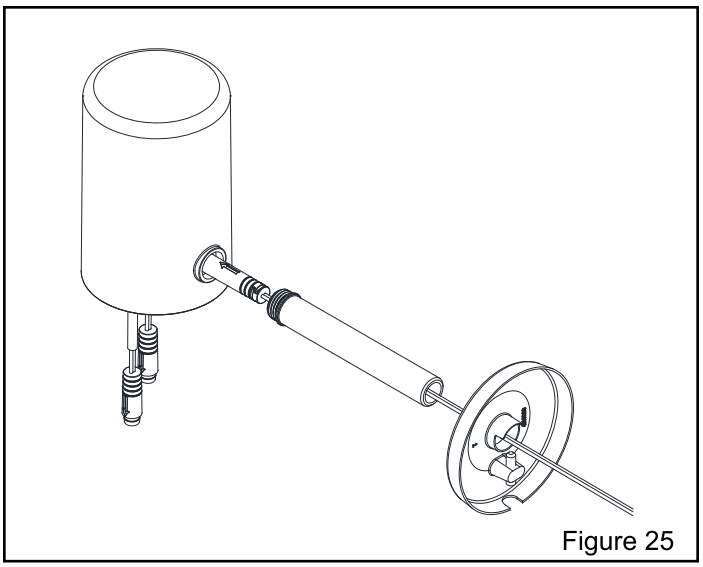

Figure 25

STEP 6.12
Align set screw hole in sensor cap with key way in ring insert and place sensor cap on valve body.

Rotate sensor cap counter clockwise until the set screw is visible in the sensor cap hole and the sensor is facing forward. Using the 3/32" allen wrench(provided) rotate the set screw clockwise to secure the cap.

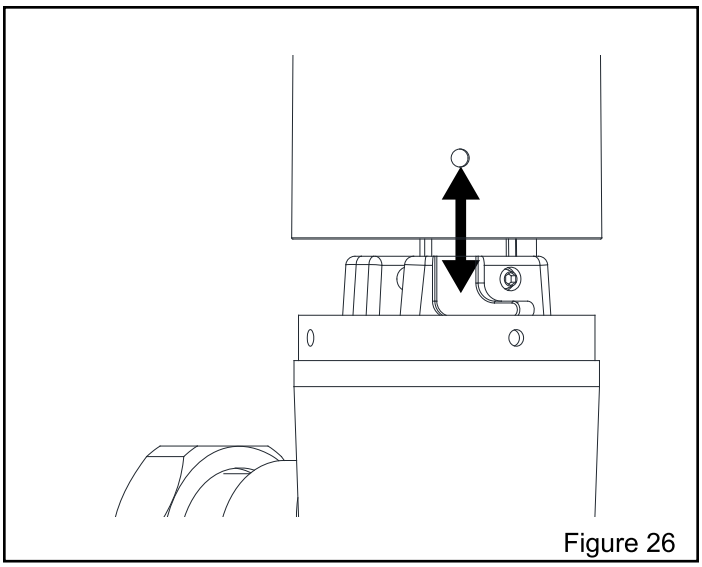

Figure 26

Courtesy Flush Settings (when necessary)

STEP 1
A courtesy flush can be enabled for the ZTR flushometer where the valve will automatically flush at a specified interval based on customer preference. Simply manipulate Dipswitches #2 and #3 located on the Sensor Lens found on the inside of the Sensor Cap to change the courtesy flush interval.

Courtesy Flush Interval	Dipswitch #2	Dipswitch #3
Disabled (Default Setting)	ON	ON
24 hours	ON	OFF
48 hours	OFF	ON
72 hours	OFF	OFF

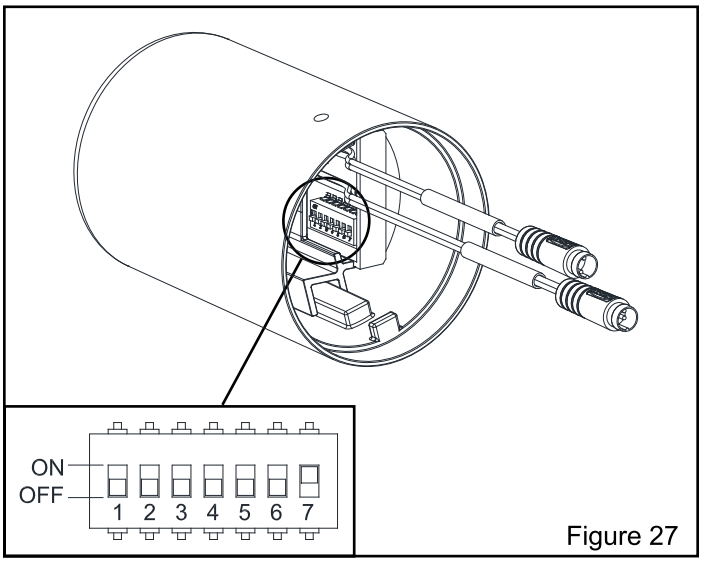

Figure 27

Sensor Range Adjustment (when necessary)

STEP 1.1
Place the Zurn MagicMagnet® (supplied) against the cap at the lower right corner of the Zurn logo under the sensor lens. Hold in place until the valve automatically flushes and the red LED light flashes two(2) times. Remove Magic Magnet ® from flush valve. The valve has entered calibrate mode

STEP 1.2
Place light-colored target at desired detection range away from sensor. After 10 more LED flashes followed by a double flash and/or flush the new detection range will be calibrated and set.

⚠ *Test new calibrated sensor range using targets of various material types/textures to ensure calibration accuracy. Verify that sensor range does not detect stall doors or other reflective surfaces.*

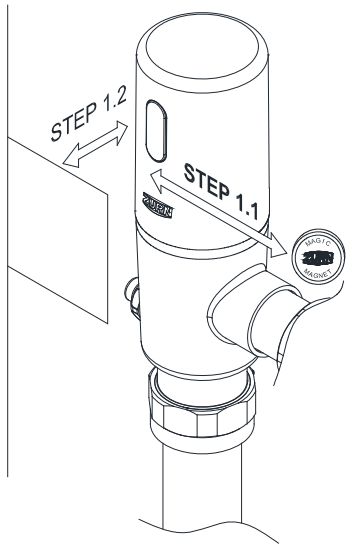

Figure 28

Care and Cleaning Instruction

- Do not use any abrasive or chemical cleaners to clean the flushometer.
- ONLY use mildly warm soapy water, and then wipe the device dry with a clean/soft towel or cloth.
- Upon cleaning other areas of the restroom, be sure the sensor lenses are protected from other cleaning chemicals/solvents to prevent potential damages to the sensor and/or electronics.

Accessing Piston Kit

1.) Turn off water supply and press manual override button to relieve all water pressure.

2.) Remove valve cap to expose ring insert. Using the M3 Allen Wrench remove the 4 screws and the ring insert.

3.) Remove the remaining 2 screws and the solenoid flange.

4.) Remove the piston kit from the valve body and inspect for damage to the seals or debris in the orifice. Exccessive build up of debris may occur on filter screen.

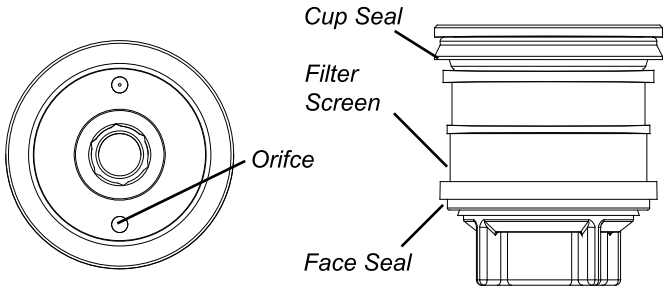

TROUBLE SHOOTING GUIDE

PROBLEM	INDICATOR	POTENTIAL CAUSE	SOLUTION
Valve does not flush	No lights on sensor board	Batteries not making contact	Remove and reinstall batteries correctly - See step 5A for reference
		Batteries reversed polarity	
	Sensor flashes (red) every 10 seconds	Low battery voltage indication	Replace batteries - see Step 5A for reference
	Sensor flashes (red) every 30 seconds	Continous target detectioin of object within sensor range	#1 Inspect and clean lens
			#2 Identify and remove any target from sensor field
			#3 Reduce sensor range distance (see page 8 for Sensor Range Adjustment instructions.
	Sensor detects user but fails to flush upon exiting sensor range	Batter power level too low to activate full flush - sensor board automatically shuts down to avoid open flush	Replace batteries See Step 5A for reference
		Dirty sensor lens	Clean lens until free of debris
		Loose or damaged solenoid connection	Inspect connection between solenoid and sensor for proper insertion - step 4
	No target detected	Install environment may require adjustment of the sensor range from the factory settings	Re-calibrate sensor range - see Sensor Range Adjustment (Figure 28) page 11
Valve does not shut off water (continuous flow)	Normal target detection	Water pressure either too high or too low	Adjust water pressure to recommended range: 35 to 80 psi running water pressure
		Piston and / or solenoid plugged or damaged	Remove Piston and / or Solenoid to examine for damage or plugging. Clean piston / solenoid orifice if plugged. Replace solenoid kit if solenoid diaphragm is damaged.
		Low or no power allowing solenoid to move to open position but not enough power to return to closed position.	Replace batteries or restore power if hardwired.
		MOB (mechanical override button) sticking in open position	Replace MOB.
Valve flows low (short flushing)	Valve does not evacuate fixture	Tailpiece filter is clogged with debris	#1 Turn stop off #2 Remove valve from stop and fixture #3 Inspect/clean filter (see parts breakdown - Part number 10)
		Piston orifice is enlarged	Replace piston
		Flush valve rating does not match fixture flush rating	Replace flush valve to match fixture flush rating
Ghost flushing	Flush valve activates without target present.	Highly reflective environment	Re-calibrate sensor range - see Sensor Range Adjustment
		Sensor range set too far, picking up other objects.	
Continuous flushing	Valve flushes every 30 seconds.	Magnet stored in sensor cap.	Remove magnet from sensor cap. Do not store magnet in flush valve.
Electronic Control Board	Cannot adjust sensor range	Processor latched	Reset electronics module by removing cap, disconnect power connectior and shorting terminals together. Reconnect power, allowing 30 seconds to complete power up sequence.
	DIP switch settings	Configuration changes to DIP switches	Remove cap from valve and disconnect power. Move DIP switch to desired position. Reconnect power, allowing 30 seconds to complete power up sequence.

For futher assistance with troubleshooting, visit http://www.zurn.com/

ZTR6200EV Series Parts Breakdown (Plastic Cap)

Parts Identification

1. Cover screw
2. Valve Cap/Sensor Assembly
3. Solenoid
4. Piston Cover Screws
5. Solenoid Kit
6. Flange O-rings
7. Piston Kit
8. Valve Housing
9. Manual Override Button
10. Filter
11. Valve Assembly
12. Vacuum Breaker
13. Vacuum Breaker Tube
14. Vacuum Breaker Tube Nut
15. Spud Nut
16. Spud Friction Washer
17. Spud Sleeve
18. Spud Escutcheon
19. Setscrew for Control Stop Cover
20. Vandal-Resistant Control Stop Cover
21. Stop Cap Bonnet
22. Stop Internals
23. Piston Seal
24. Stop Body
25. Sweat Solder Adapter
26. Supply Cover Tube
27. Setscrew for Cast Wall Escutcheon
28. Cast Wall Escutcheon
29. Hex Wrench
30. Top Valve Cap/Sensor Assembly
31. Battery Housing
32. Hardwired Top Valve Cap/Sensor Assembly
33. Wire Supply Tube and Escutcheon

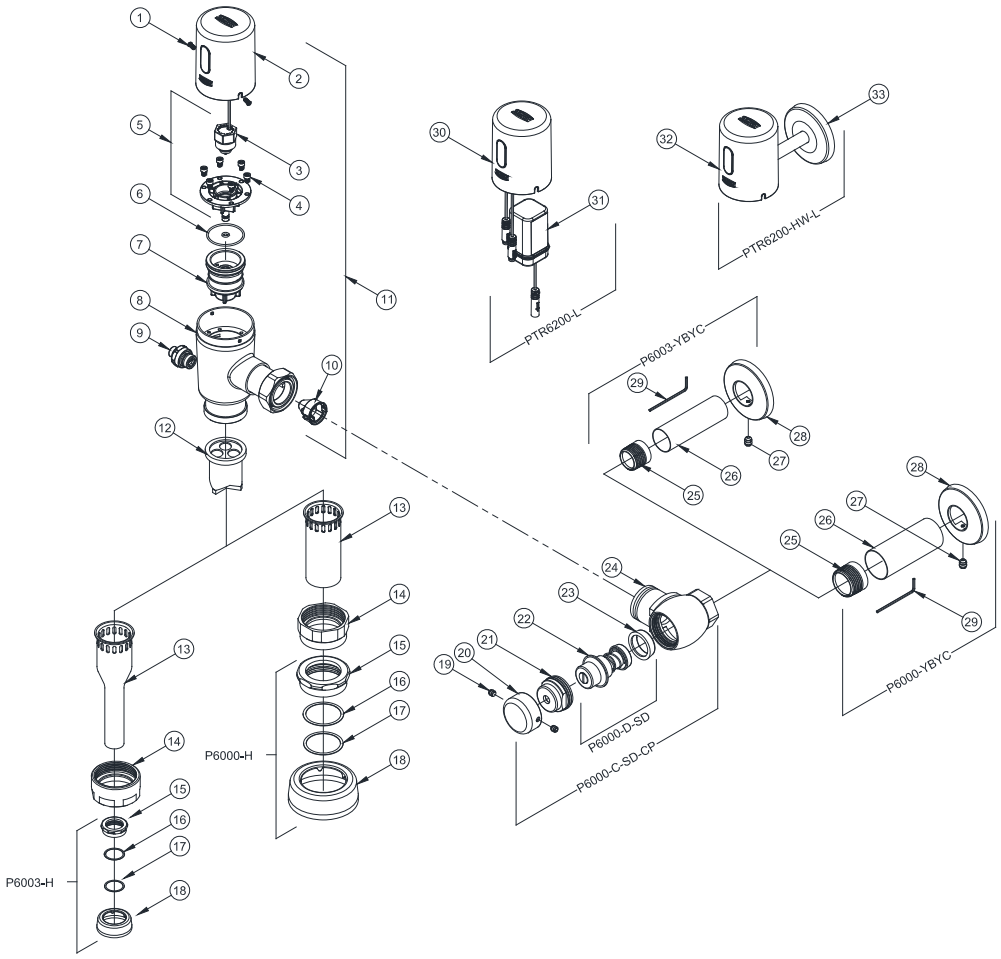

Battery Cap	Product No.
Metal Valve Cap, (1.1 gpf), Item 2	PTR6200-L-1.1-VR
Metal Valve Cap, (1.28 gpf), Item 2	PTR6200-L-1.28-VR
Metal Valve Cap, (1.6 gpf), Item 2	PTR6200-L-1.6-VR
Metal Valve Cap, (1.0 gpf), Item 2	PTR6200-L-1.0-VR
Metal Valve Cap, (0.5 gpf), Item 2	PTR6200-L-0.5-VR
Metal Valve Cap, (0.25 gpf), Item 2	PTR6200-L-0.25-VR
Metal Valve Cap, (0.125 gpf), Item 2	PTR6200-L-0.125-VR

Hardwired Cap	Product No.
Valve Cap, (1.1 gpf), Item 32	PTR6200-HW-L-1.1
Valve Cap, (1.28 gpf), Item 32	PTR6200-HW-L-1.28
Valve Cap, (1.6 gpf), Item 32	PTR6200-HW-L-1.6
Valve Cap, (1.0 gpf), Item 32	PTR6200-HW-L-1.0
Valve Cap, (0.5 gpf), Item 32	PTR6200-HW-L-0.5
Valve Cap, (0.25 gpf), Item 32	PTR6200-HW-L-0.25
Valve Cap, (0.125 gpf), Item 32	PTR6200-HW-L-0.125

Valve and Components	Product No.
Valve Housing, Items 8 & 9	PTR6200-HSA
Solenoid Replacement Kit for Valves with Metal Caps, Item 5	PTR6200-M-VR
Piston Kit (1.1/1.28/1.6 GPF), Item 7	PTR6200-EC
Piston Kit (0.5/1.0 GPF), Item 7	PTR6203-EU
Piston Kit (0.125/0.25 GPF), Item 7	PTR6203-EU-ULF
Manual Override Button Assy, Item 9	PTR6200-24
Flange O-Ring, Item 6	PTR6200-M-ring
Flange Screws for Valves with Metal Caps, Item 4	PTR6200-M-S-VR
Filter, (1.28/1.6 gpf), Item 10	P6000-FA
Filter, (1.0/0.5 gpf), Item 10	PTR6203-FA
Sealed Battery Housing, Item 31	PTR6200-BATT

Flush Connections and Spud Coupling Kits	Product No.
Flush Connection and Spud Coupling, Items 15-18	P6000-H P6003-H
Vacuum Breaker Repair Kit, Items 12	P6000-B-HP P6003-B-HP
Vacuum Breaker Tube	P6000-A-CP
Vacuum Breaker Tube Nut	P6000-AA-CP

Control Stop Repair Kit and Parts	Product No.
Control Stop Repair Kit for 1” and 3/4”, Includes Items 14-20	P6000-C-SD-CP
Seal Seat for 1” and 3/4”, Includes Item 23	P6000-D42
Sweat Solder Adapter, Includes Item 25	P6000-YBA
Vandal resistant control stop cover Items 19-20	P6000-VC
Sweat solder kit, Items 25-29	P6000-YBYC
Sweat solder kit, Items 25-29	P6003-YBYC

ZURN INDUSTRIES, LLC 5900 Elwin Buchanan Drive, Sanford, NC U.S.A. 27330, Ph. 1-800-997-3876, Fax 919-775-3541
In Canada: **ZURN INDUSTRIES LIMITED** 7900 Goreway Drive, Unit 10, Brampton, Ontario L6T 5W6, Ph. 905-405-8272, Fax 905-405-1292
Rev. T Date: 7/18/2018 C.N. No. SAN008311 Prod. | Dwg. No. FV541

ZTR6200EV Series Parts Breakdown (Metal Cap)

Parts Identification

1. Ring Insert Assembly
2. Valve Cap/Sensor Assembly
3. Solenoid
4. Piston Cover Screws
5. Solenoid Kit
6. Flange O-rings
7. Piston Kit
8. Valve Housing
9. Manual Override Button
10. Filter
11. Valve Assembly
12. Vacuum Breaker
13. Vacuum Breaker Tube
14. Vacuum Breaker Tube Nut
15. Spud Nut
16. Spud Friction Washer
17. Spud Sleeve
18. Spud Escutcheon
19. Setscrew for Control Stop Cover
20. Vandal-Resistant Control Stop Cover
21. Stop Cap Bonnet
22. Stop Internals
23. Piston Seal
24. Stop Body
25. Sweat Solder Adapter
26. Supply Cover Tube
27. Setscrew for Cast Wall Escutcheon
28. Cast Wall Escutcheon
29. Hex Wrench
30. Vandal Resistant Top Valve Cap/Sensor Assembly
31. Battery Housing
32. Vandal Resistant Hardwired Top Valve Cap/Sensor Assembly
33. Wire Supply Tube and Escutcheon

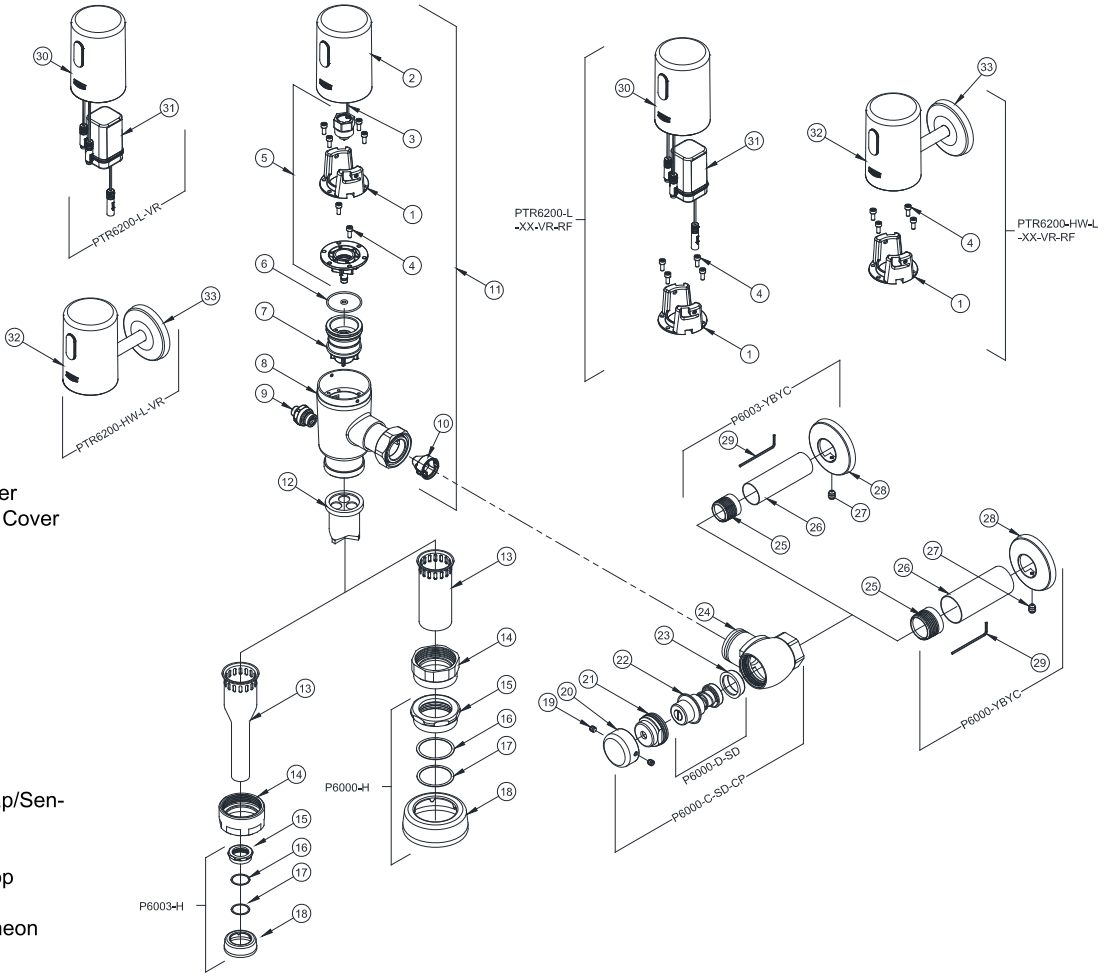

Battery Cap	Product No.
Metal Valve Cap, (1.1 gpf), Item 2	PTR6200-L-1.1
Metal Valve Cap, (1.28 gpf), Item 2	PTR6200-L-1.28
Metal Valve Cap, (1.6 gpf), Item 2	PTR6200-L-1.6
Metal Valve Cap, (1.0 gpf), Item 2	PTR6200-L-1.0
Metal Valve Cap, (0.5 gpf), Item 2	PTR6200-L-0.5
Metal Valve Cap, (0.25 gpf), Item 2	PTR6200-L-0.25
Metal Valve Cap, (0.125 gpf), Item 2	PTR6200-L-0.125
Metal Valve Cap Retrofit Kit, Item 1, 4, 30 & 31	PTR6200-L-XX-VR-RF

Hardwired Cap	Product No.
Metal Valve Cap, (1.1 gpf), Item 32	PTR6200-HW-L-1.1
Metal Valve Cap, (1.28 gpf), Item 32	PTR6200-HW-L-1.28
Metal Valve Cap, (1.6 gpf), Item 32	PTR6200-HW-L-1.6
Metal Valve Cap, (1.0 gpf), Item 32	PTR6200-HW-L-1.0
Metal Valve Cap, (0.5 gpf), Item 32	PTR6200-HW-L-0.5
Metal Valve Cap, (0.25 gpf), Item 32	PTR6200-HW-L-0.25
Metal Valve Cap, (0.125 gpf), Item 32	PTR6200-HW-L-0.125
Metal Valve Cap Retrofit Kit, Item 1, 4, 30 & 31	PTR6200-HW-L-XX-VR-RF

Valve and Components	Product No.
Valve Housing, Items 8 & 9	PTR6200-HSA
Solenoid Replacement Kit for Valves with Metal Caps, Item 5	PTR6200-M-VR
Piston Kit (1.1/1.28/1.6 GPF), Item 7	PTR6200-EC
Piston Kit (0.5/1.0 GPF), Item 7	PTR6203-EU
Piston Kit (0.125/0.25 GPF), Item 7	PTR6203-EU-ULF
Manual Override Button Assy, Item 9	PTR6200-24
Flange O-Ring, Item 6	PTR6200-M-ring
Flange Screws for Valves with Metal Caps, Item 4	PTR6200-M-S-VR
Filter, (1.28/1.6 gpf), Item 10	P6000-FA
Filter, (1.0/0.5 gpf), Item 10	PTR6203-FA
Sealed Battery Housing, Item 31	PTR6200-BATT

Flush Connections and Spud Coupling Kits	Product No.
Flush Connection and Spud Coupling, Items 15-18	P6000-H P6003-H
Vacuum Breaker Repair Kit, Items 12	P6000-B-HP P6003-B-HP
Vacuum Breaker Tube	P6000-A-CP
Vacuum Breaker Tube Nut	P6000-AA-CP

Control Stop Repair Kit and Parts	Product No.
Control Stop Repair Kit for 1” and 3/4”, Includes Items 14-20	P6000-C-SD-CP
Seal Seat for 1” and 3/4”, Includes Item 23	P6000-D42
Sweat Solder Adapter, Includes Item 25	P6000-YBA
Vandal resistant control stop cover Items 19-20	P6000-VC
Sweat solder kit, Items 25-29	P6000-YBYC
Sweat solder kit, Items 25-29	P6003-YBYC

ZURN INDUSTRIES, LLC 5900 Elwin Buchanan Drive, Sanford, NC U.S.A. 27330, Ph. 1-800-997-3876, Fax 919-775-3541
In Canada: **ZURN INDUSTRIES LIMITED** 7900 Goreway Drive, Unit 10, Brampton, Ontario L6T 5W6, Ph. 905-405-8272, Fax 905-405-1292
Rev. T Date: 7/18/2018 C.N. No. SAN008311 Prod. | Dwg. No. FV541