ELKAY SPECIFICATIONS

Crosstown® 16 Gauge Stainless Steel 30-1/2" x 18-1/2" x 8" Single Bowl Undermount Sink
Model(s) EFRU2816T

PRODUCT SPECIFICATIONS

Crosstown® 16 Gauge Stainless Steel 30-1/2" x 18-1/2" x 8" Single Bowl Undermount Sink. Sink is handmade/fabricated from 16 gauge 304 Stainless Steel with a Polished Satin finish, Rear Center drain placement, and Full spray sides and bottom with Sides and Bottom pads.

Installation Type:	Undermount
Material:	304 Stainless Steel
Finish:	Polished Satin
Gauge:	16
Sound Deadening:	Full spray sides and bottom with Sides and Bottom pads
Number of Bowls:	1
Sink Dimensions:	30-1/2" x 18-1/2" x 8"
Bowl 1 Dimensions:	28" x 16" x 8"
Drain Size:	3-1/2" (89mm)
Drain Location:	Rear Center
Minimum Cabinet Size:	36"
Mounting Hardware:	Part # 54300008 included
Template Included:	Yes
Cutout Template #:	1000001302

Template is available for download at elkay.com. CAD software will be required to open the template.

Special Note: Reserve Selection products are sold exclusively, in-store and online, through authorized wholesalers.

Installation Profile:

1/8" OVERHANG

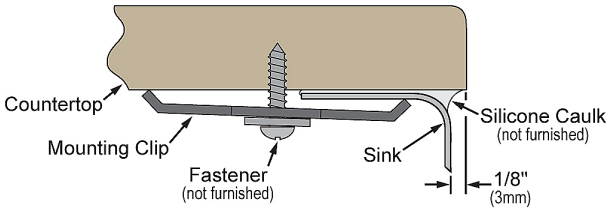

Designed to affix to the underside of any solid surface countertop.

A Century of Tradition and Quality.
For more than 100 years, Elkay has been making innovative products and providing exceptional customer care. We take pride in offering plumbing products that make life easier, inspire change and leave the world a better place.

KBB READERS' CHOICE AWARDS 2025 WINNER

Product Compliance: ASME A112.19.3/CSA B45.4

Sinks are listed by IAPMO® as meeting the applicable requirements of the Uniform Plumbing Code®, International Plumbing Code®, and National Plumbing Code of Canada.

Clean and Care Manual (PDF)
Installation Instructions (PDF) - 1000005239
Warranty (PDF)

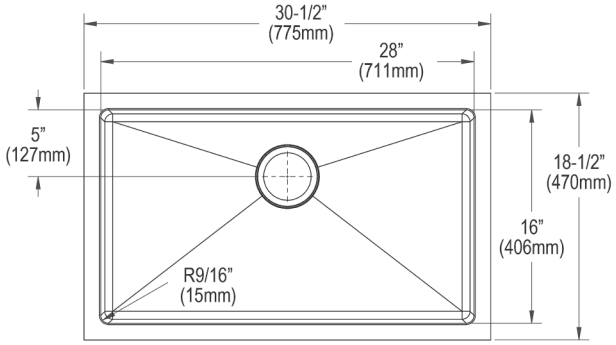

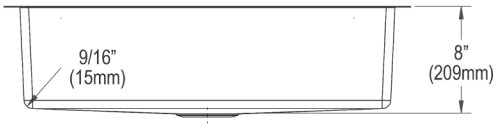

PART:_____QTY: _____

PROJECT:_____

CONTACT:_____

DATE:_____

NOTES:_____

APPROVAL:_____

In keeping with our policy of continuing product improvement, Elkay reserves the right to change product specifications without notice. Please visit elkay.com for the most current version of Elkay product specification sheets. This specification describes an Elkay product with design, quality, and functional benefits to the user. When making a comparison of other producers' offerings, be certain these features are not overlooked. Latest version of the spec sheet available: https://www.elkayfiles.com/spec-sheets/EFRU2816T_spec.pdf

Optional Accessories		
CTXBG2614	Crosstown® Stainless Steel 26-3/8" x 14-3/8" x 1-1/4" Bottom Grid Spec Sheet (PDF)	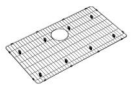
LK35	3-1/2" Drain Fitting Type 304 Stainless Steel Body Strainer Basket with 316 Stainless Steel Tailpiece Spec Sheet (PDF)	
LKDD	3-1/2" Drain Fitting Deep Strainer Basket Spec Sheet (PDF)	

In keeping with our policy of continuing product improvement, Elkay reserves the right to change product specifications without notice. Please visit elkay.com for the most current version of Elkay product specification sheets. This specification describes an Elkay product with design, quality, and functional benefits to the user. When making a comparison of other producers' offerings, be certain these features are not overlooked. Latest version of the spec sheet available: https://www.elkayfiles.com/spec-sheets/EFRU2816T_spec.pdf