Eemax™
Hot Water Solutions Made Easy

INSTALLATION GUIDE AND OWNER'S MANUAL

AccuMix II™

ELECTRIC INSTANTANEOUS WATER HEATER
WITH ASSE 1070 APPROVED MIXING VALVE



⚠WARNING ***BEFORE ATTEMPTING ANY INSTALLATION, MODIFICATION OR SERVICE OF THIS HEATER, MAKE SURE THE ELECTRICAL POWER IS DISCONNECTED.***

Read and understand these instructions thoroughly before attempting the installation or service of this water heater. Failure to follow these instructions can result in serious injury, death and/or property damage. The warranty of this water heater will depend upon proper installation according to these instructions. Some heaters come supplied with separate faucet aerators. If supplied, the aerator must be installed in the faucet for optimum performance. This heater must be used to heat water only and must be installed in a location where it is not subject to freezing temperatures. The manufacturer is not liable for any damages resulting from improper installation or misuse.

This installation must conform to the latest requirements of the National Electrical Code and all applicable state and local codes. This information is available through your local authorities. You must understand these requirements before beginning this installation.

This unit is not required by UL 499 to employ a temperature and pressure relief valve (T&P). You should check with local codes to find out if one is required. If it is, it must be installed in the outlet hot water pipe between the heater and the isolation valve.

IMPORTANT SAFETY INSTRUCTIONS

When using this electrical equipment, basic safety precautions should always be followed, including the following:

READ AND FOLLOW ALL INSTRUCTIONS

A green terminal (or a wire connector marked “G”, “GR, “Ground”, or “GROUNDING”) is provided within the control box. To reduce the risk of electric shock, connect this terminal or connector to the grounding terminal of the electric service or supply panel with a continuous copper wire in accordance with your local electrical code.

Contents

GENERAL....4
1) MOUNTING THE UNIT TO THE WALL....5
2) PLUMBING HOOK-UP....6
3) ELECTRICAL HOOK-UP....9
4) COMMISSIONING THE HEATER....11
5) TROUBLESHOOTING....13
6) PERIODIC MAINTENANCE....14
7) PART NUMBERS FOR FITTINGS, AERATORS AND AERATOR ADAPTORS....15
8) REPAIR PARTS FOR ACCUMIX II UNITS....15

⚠CAUTION ***(CANADIAN INSTALLATIONS ONLY) CONNECT ONLY TO A CIRCUIT PROTECTED BY A CLASS A GROUND FAULT CIRCUIT INTERRUPTER. ATTENTION: BRANCHER UNIQUEMENT À UN CIRCUIT PROTÉGÉ PAR UN DISJONCTEUR DE FUITE DE TERRE DE CLASSE A.***

⚠CAUTION ***(CANADIAN INSTALLATIONS ONLY) DO NOT INSTALL IN A BATH ENCLOSURE OR SHOWER STALL OR CONNECT TO A SALT-REGENERATED WATER SOFTENER OR A WATER SUPPLY OF SALT WATER. ATTENTION: NE PAS INSTALLER DANS UNE BAIGNOIRE OU UNE CABINE DE DOUCHE ET NE PAS BRANCHER À UN ADOUCISSEUR D'EAU RÉGÉNÉRÉ AVEC DU SEL OU À UN APPROVISIONNEMENT EN EAU SALÉE.***

⚠CAUTION ***(CANADIAN INSTALLATIONS ONLY) USE COPPER CONDUCTORS ONLY. USE BONDING CONDUCTOR IN ACCORDANCE WITH THE CANADIAN ELECTRICAL CODE PART I. UTILISEZ DEZ CONDUCTEURS EN CUIVE UNIQUEMENT. UTILISEZ DES CONDUCTEURS DE MIZE À LA MASSE CONFORMEMENT AU CODE CANADIEN DE L'ÉLECTRICITÉ, PARTIE I.***

SAVE THESE INSTRUCTIONS

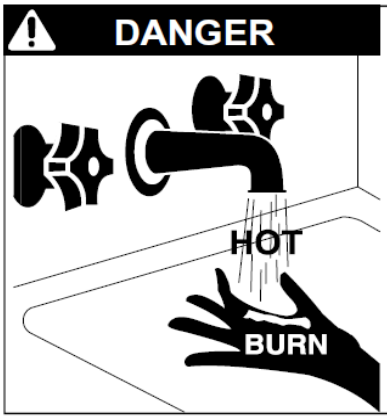

Hot water can be dangerous, especially for infants or children, the elderly, or infirm. There is hot water scald potential if the thermostat is set too high.

Water temperatures over 125° F (51° C) can cause severe burns or scalding resulting in death.

Hot water can cause first degree burns with exposure for as little as:

3 seconds at 140° F (60° C)

20 seconds at 130° F (54° C)

8 minutes at 120° F (48° C)

Test the temperature of the water before placing a child in the bath or shower.

Do not leave a child or an infirm person in the bath unsupervised.

GENERAL

The Eemax, Inc.™ **AccuMix II** heater is specifically designed to take in cold water and heat it to temperatures suitable for handwashing and other mild temperature uses up to a factory preset of 105°F. The unit employs a complex algorithm that actively manages power application to real-time system demand. An integrated flow meter, along with inlet and outlet thermistors, provide data that allows the heater to instantly adapt to variations in flow and temperature. It is also equipped with an ASSE 1070-2004 approved mixing valve to meet UPC 407.3 and similar plumbing codes for public handwashing applications. AccuMix II employs an integrated mixing valve utilized according to the manufacturer's stated specifications and certified to ASSE 1070-2004.

To obtain optimum performance and energy savings, the unit should be located as close as possible to the point-of-use. The unit is supplied with compression rings and nuts suitable for direct coupling to 3/8" copper or PEX™ piping. Do not use additional screwed fittings, pipe dope or teflon tape – doing so will void the warranty. **DO NOT SOLDER PIPES WHILE THE UNIT IS INSTALLED** as serious damage to the heater will result.

1) MOUNTING THE UNIT TO THE WALL

⚠CAUTION ***THIS HEATER MUST BE INSTALLED IN A LOCATION WHERE IT IS NOT SUBJECT TO FREEZING TEMPERATURES.***

1. The heater should be mounted under the sink as close to the point-of-use as possible. Ideal position is fittings pointed down, but the heater can be mounted in any orientation.

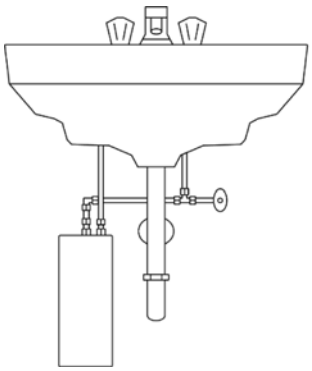

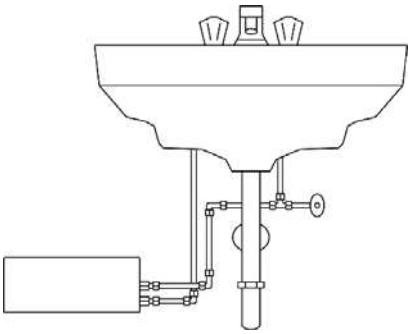



2. Make sure to leave a minimum of 8 inches service clearance at the end **OPPOSITE** the fittings.



3. Remove the cover and fasten to the wall using the four mounting holes at each corner of the back plate. Replace the cover.

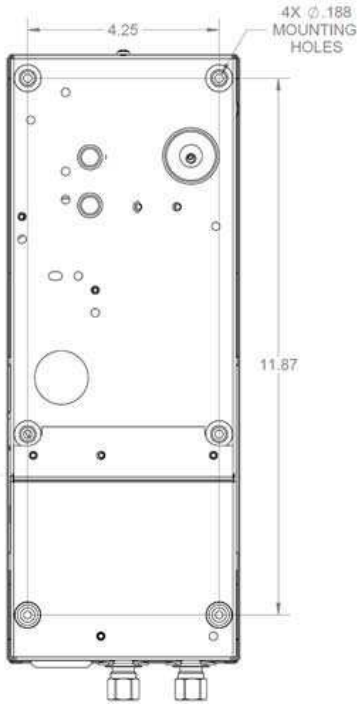

2) PLUMBING HOOK-UP

The heater is supplied with 3/8”brass compression fittings that are compatible with either copper or plastic pipes. Make sure these fittings are used for this installation. Contact your Eemax representative for further information.

⚠CAUTION ***NEVER SUBSTITUTE THREADED PIPE FITTINGS USING PIPE DOPE OR TEFLON TAPE AND NEVER SOLDER ANY PIPE CONNECTIONS WHILE ATTACHED TO THIS HEATER BECAUSE DAMAGE TO THE HEATER WILL RESULT. DOING THIS WILL VOID THE WARRANTY!***

Eemax strongly recommends that the heater be supplied directly from the main cold water trunk line when possible. This helps to avoid a potential water flow interruption to the heater which could lead to a failure of the heating element.

System Requirements:

- **Minimum/maximum working pressure: 30 PSI/150 PSI**
- **Optimal operating pressure range: 35 to 80 PSI**
- **Min flow rate 0.3 GPM**

For optimum performance, we recommend the use of isolation valves (full flow ball type) on the inlet and outlet pipes and use of a 40 mesh Y-Strainer on the inlet of the heater. Clean screen periodically for best performance of the mixing valve.

⚠WARNING ***BEFORE ATTEMPTING ANY INSTALLATION, MODIFICATION OR SERVICE OF THIS HEATER, MAKE SURE THE ELECTRICAL POWER IS DISCONNECTED.***

1. The heater’s water INLET and OUTLET are labeled. Install full flow ball valves to the inlet and outlet pipes and run water through the inlet pipe into a bucket to purge it of any debris. Close the inlet ball valve. **FAILURE TO DO SO MAY CLOG MIXING VALVE!**	
2. Make sure the inlet filter screen is present in the inlet fitting and the inlet and outlet pipes are correctly aligned with the heater connections to minimize stress on the heater.	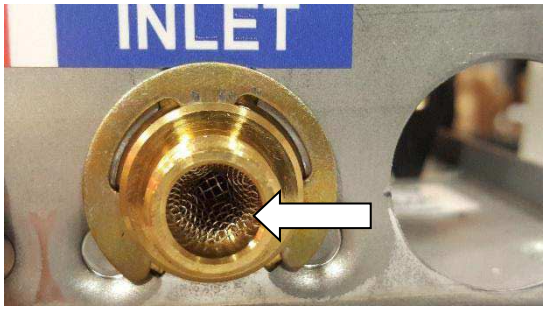

3. Remove the cover. Connect the pre-assembled inlet and outlet pipes to the heater **(do not overtighten compression fittings)** and fully open the inlet and outlet ball valves. Check the system for water leaks at all plumbing connections. If a leak is present at the compression fitting, **slowly** tighten compression nut until it stops – **do not overtighten**.

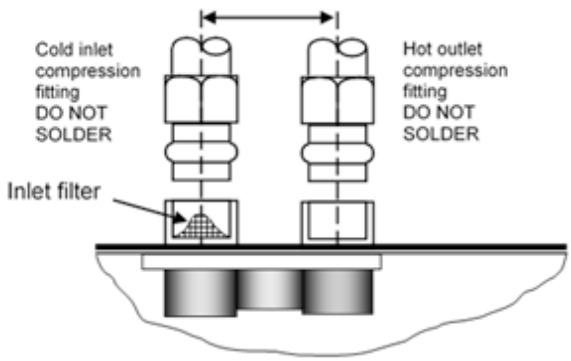

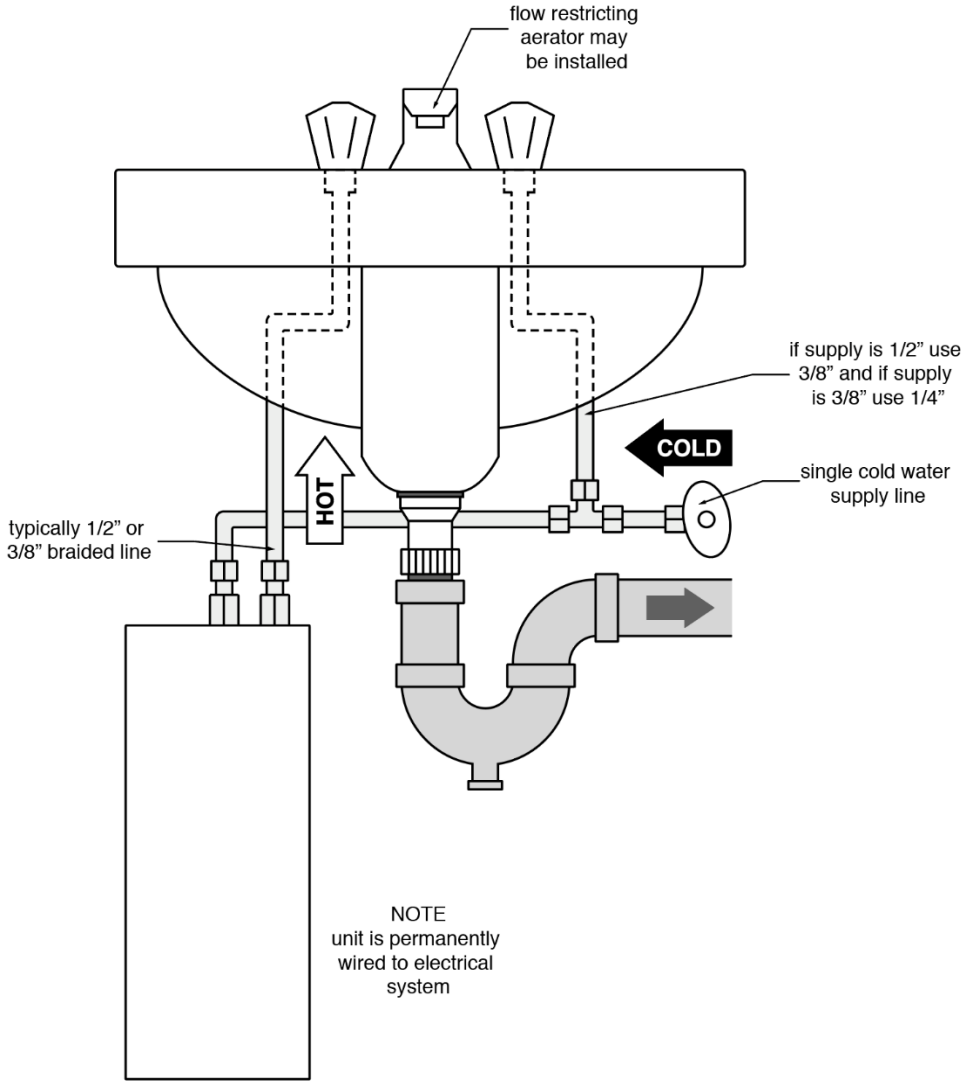

4. Open the hot water faucet and run water for minimum 60 seconds and until the flow is continuous and free of air pockets. Close the faucet and install the aerator (if supplied).

Failure to install aerator (if supplied) will result in lower-than-expected heater performance.

Model	# of Aerators
AM004120T	1
AM005240T	1
AM007240T	2
AM010240T	3
AM012240T	4
AM004277T	1
AM008277T	2
AM010277T	3



3) ELECTRICAL HOOK-UP

⚠WARNING ***BEFORE BEGINNING ANY WORK ON THIS INSTALLATION, BE SURE THAT THE ELECTRICAL BREAKER IS "OFF" AND THAT ALL MOUNTING AND PLUMBING WORK HAS BEEN COMPLETED PER THESE INSTRUCTIONS.***

This heater must have its own independent circuit using insulated, UL listed, 2 wire cable (2 wire plus ground) of the appropriate size suitable for up to 75°C and protected by the correctly rated circuit breaker. For recommended copper wiring for conductors with a temperature rating of 75°C refer to the chart below:

ELECTRICAL SPECIFICATIONS

AccuMix II model number	Voltage (VAC)	Max power (kW)	Max current (A)	Minimum wire size (AWG) @75°C rating
AM004120T	120	3.5	29	10
AM005240T	240	4.8	20	14
AM007240T	240	6.5	27	10
AM010240T	240	9.5	40	8
AM012240T	240	11.5	48	8
AM004277T	277	4.1	15	14
AM008277T	277	8.0	29	10
AM010277T	277	10.0	36	8

1. Power cable entry to the heater should be made through one of the knock-out holes located on the back plate or top/bottom ends of the unit. Use the appropriate strain relief fitting.



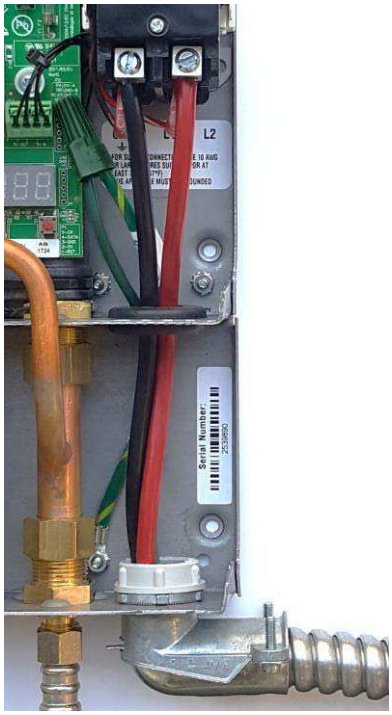

2. The power leads are to be secured to the L1 and L2 or L and N connectors on the terminal block or relay. The ground lead is to be secured to the GND connector on the block or the green ground wire with the provided wire nut.

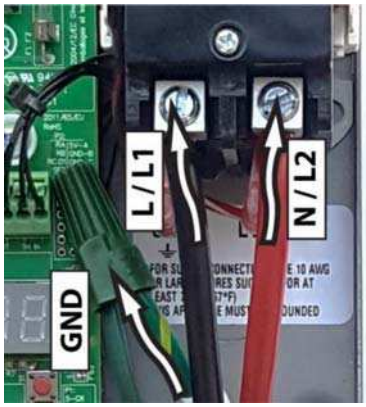

⚠WARNING ***FAILURE TO GROUND THE SYSTEM MAY RESULT IN SERIOUS INJURY, DEATH AND/OR PROPERTY DAMAGE.***

3. Optional: The heater comes preset in silent mode. If silent mode is the intended use, please proceed to step 4. To switch between silent and non-silent operation place the jumper on the control board in position "D".

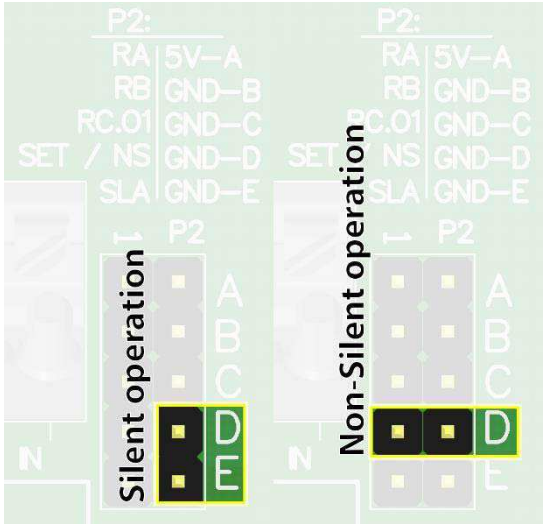

4. Leave the breaker in the "OFF" position. Proceed to the next section:
COMMISSIONING THE HEATER



4) COMMISSIONING THE HEATER

⚠CAUTION ***BEFORE SWITCHING THE ELECTRICAL BREAKER "ON", MAKE SURE THE INLET AND OUTLET BALL VALVES ARE FULLY OPEN AND WATER IS FLOWING THROUGH THE HOT WATER FAUCET FOR A MINUTE OR TWO UNTIL THE FLOW IS CONTINUOUS AND FREE FROM AIR POCKETS. DO NOT SWITCH THE BREAKER "ON" IF THERE IS A POSSIBILITY THE WATER IN THE HEATER IS FROZEN.***

1. Make sure water is flowing through the faucet.	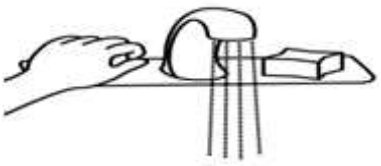
2. Switch "ON" the electric power supply at the breaker.	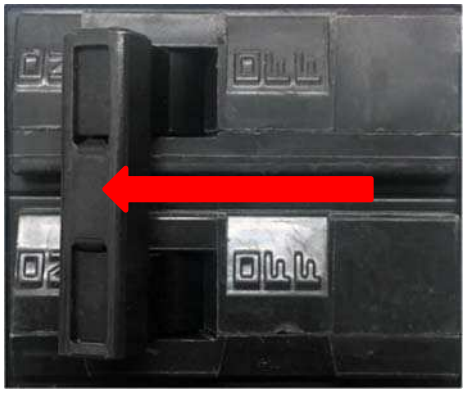
3. Keep water flowing through the faucet for the next step. **4.** The display on the circuit board should come "ON". With the flow running, the heater will go through the 60 seconds startup/self-calibration procedure. The display will count down from 60 to 0. When the display timer reaches 45, the unit starts heating and continues counting down to 0.	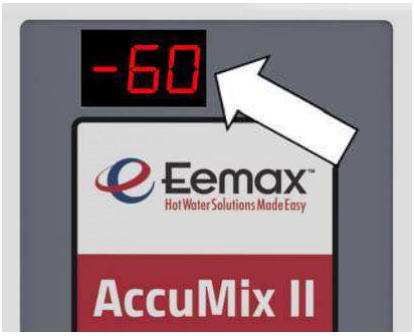
5. After the 60 seconds in step 4, the display will show the temperature setpoint. **The heater is commissioned at this point.** Faucet can be turned off and used as needed. **Note:** the temperature display will turn off after 5 minutes of inactivity. Display turns on when water flows through heater.	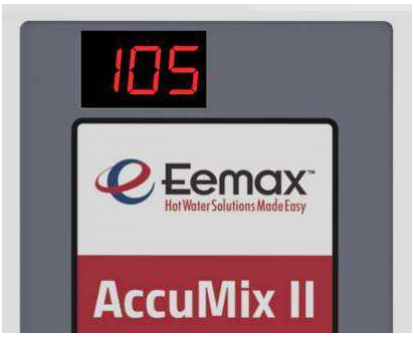

Congratulations!

Your Eemax tankless electric water heater is fully installed and ready for use!

MAXIMUM TEMPERATURE RISE AT SPECIFIED FLOW RATE, °F

	GPM			240VAC heaters used at 208VAC GPM		
Model	0.5	1.0	1.5	0.5	1.0	1.5
AM004120T	48	24	16	x	x	x
AM005240T	66	33	22	49	24	16
AM007240T	89	44	30	66	33	22
AM010240T	130	65	43	97	48	32
AM012240T	157	79	52	118	59	39
AM004277T	56	28	19	x	x	x
AM008277T	109	55	36	x	x	x
AM010277T	137	68	46	x	x	x

**The heaters' actual temperature rises are limited by their thermostatic controls.*
The theoretical values shown above are only for comparison purposes.

5) TROUBLESHOOTING

CAUTION: Make certain power to unit is "OFF" before removing protective cover FOR ANY REASON.

For status code details, please consult the table below.

Code	Name	Possible causes	Heater response	Possible solutions
F23	No heat	- element failure - ECO tripped/malfunctioning - triac(s) failed open - relay/contactor malfunctioning - control board failure - inlet water supply out of spec	Heating will be disabled after 30 seconds of continuous no heat condition.	- measure element resistance with the unit completely turned off
F24	Low heat	- undervoltage - triac(s) failed open - control board failure - inlet/outlet thermistor(s) failure	Heating enabled, reduced performance (lower outlet temperature).	- verify power supply (voltage) while heater is running
F33	Residual heat	- internal water temperature elevated without flow - both triacs failed closed	Heating disabled until outlet temperature falls below 140°F.	- run water through the unit
F34	Overvoltage	- inlet voltage is too high compared to the stated heater specifications	Heating enabled, reduced performance (higher outlet temperature).	- have certified personnel verify the inlet voltage - provide voltage within specified range
F36	Undervoltage	- inlet voltage is too low compared to the stated heater specifications	Heating enabled, reduced performance (lower outlet temperature).	- have certified personnel verify the inlet voltage - provide voltage within specified range
F38	High flow	- flow is too high to heat the water to setpoint temperature	Heating enabled, unit operates as intended (lower outlet temperature possible).	- reduce flow (outlet flow restrictor, faucet aerator)
F47	Inlet thermistor failure	- inlet thermistor interrupted or disconnected	Heating enabled based on default inlet temperature setting of 65°F (higher/lower outlet temperature possible).	- inspect connections/wiring of inlet thermistor
F48	Outlet thermistor failure	- outlet thermistor interrupted or disconnected	Heating enabled, auto calibration disabled.	- inspect connections/wiring of outlet thermistor
F64	Freeze warning	- inlet temperature is too low (below 35°F)	Heating disabled while condition is present.	- increase inlet water temperature above 35°F

Still having trouble? Please call our Technical Service Department.

6) PERIODIC MAINTENANCE

This heater is designed for many years of carefree use. In order to maintain consistent water flow, it may be necessary to periodically clean the faucet aerator or the filter screen located in the brass inlet fitting at the heater.

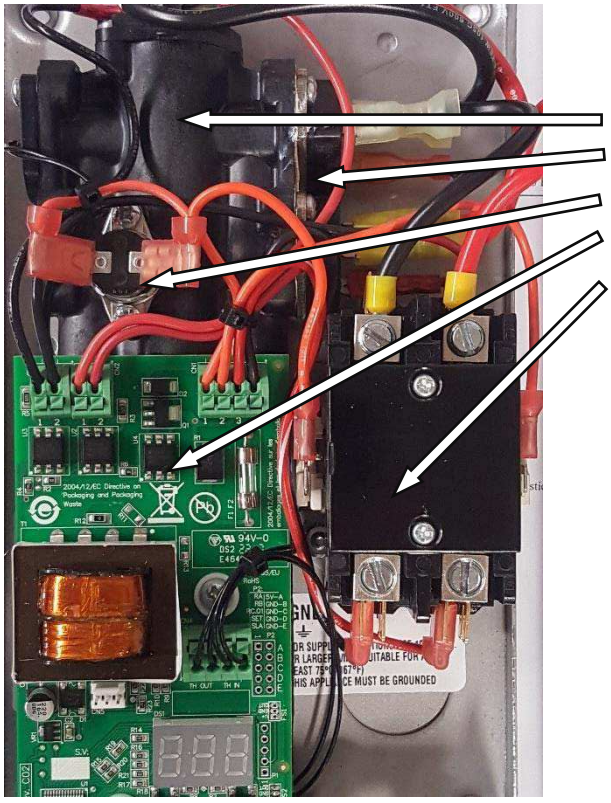

Heating chamber
Triacs
Energy cut-off (ECO)
Control board
Contactor

ELEMENT CARTRIDGE (pictured below)
INSTALLS INSIDE HEATING CHAMBER



7) PART NUMBERS FOR FITTINGS, AERATORS AND AERATOR ADAPTORS

COMPRESSION FITTINGS:	
3/8" NUT	EX68B
3/8" SLEEVE	EX68C

AERATORS:	
0.5 GPM	EX0061-0.5-AER

8) REPAIR PARTS FOR ACCUMIX II UNITS

Model number	Element cartridge	Control board	Relay	Energy Cut-Off (ECO)
AM004120T	EX410	EX384-120	EX259B	EX278A-KIT
AM004277T	EX1920	EX384-277	EX253B	EX278A-KIT
AM005240T	EX1200	EX384-240	EX255B	EX278A-KIT
AM007240T	EX890	EX384-240	EX255B	EX278A-KIT
AM008277T	EX960	EX384-277	EX253B	EX278A-KIT
AM010240T	EX630	EX384-240	EX255B	EX278A-KIT
AM010277T	EX760	EX384-277	EX253B	EX278A-KIT
AM012240T	EX500 PRT	EX384-240	EX1050-1 (contactor)	EX278A-KIT

If you need any assistance from our Technical Service Department, make sure you can identify this water heater by having the model no:_____ and serial number:_____.

Call 203-267-7890 or toll free: 800-543-6163.

Eemax Inc., 400 Captain Neville Drive, Waterbury, CT 06705

Tel: 800-543-6163, 203-267-7890, Fax: 203-267-7975, email: support@eemaxinc.com

Notes:

Eemax Inc., 400 Captain Neville Drive, Waterbury, CT 06705

Tel: 800-543-6163, 203-267-7890, Fax: 203-267-7975, email: support@eemaxinc.com

Limited Warranty

Eemax Electric Tankless Water Heaters

Subject to the terms and conditions set forth in this limited warranty, each Eemax Tankless Water Heater is warranted to the original owner ("Owner") against (i) mechanical or electrical failure of any component solely due to defects in materials or Manufacturer's workmanship for a period of one year from the date of original purchase and (ii) leaks solely due to defects in materials or Manufacturer's workmanship for the later of (x) five years from the date of original purchase or (y) the date of Owner's occupancy of a new dwelling in which the Eemax Tankless Water Heater is installed. However, if Owner cannot document the original date of purchase with the original sales receipt, then the limited warranty period begins on the date the Eemax Tankless Water Heater was manufactured. As Owner's sole and exclusive remedy, Manufacturer shall, at Manufacturer's sole election, either repair or replace the Eemax Tankless Water Heater or the defective portion of such product. Manufacturer is not liable for any costs incurred by Owner, including, without limitation, the cost of any labor. Manufacturer's maximum liability is limited to the value of the water heater. This limited warranty shall be governed by the laws of the United States.

THIS LIMITED WARRANTY SHALL BE THE EXCLUSIVE WARRANTY MADE BY MANUFACTURER AND IS MADE IN LIEU OF ALL OTHER WARRANTIES, STATUTORY, EXPRESSED OR IMPLIED (WHETHER WRITTEN OR ORAL), INCLUDING, BUT NOT LIMITED TO, WARRANTIES OF MERCHANTABILITY AND FITNESS FOR A PARTICULAR PURPOSE. MANUFACTURER EXPRESSLY DISCLAIMS THE IMPLIED WARRANTIES OF MERCHANTABILITY AND FITNESS FOR A PARTICULAR PURPOSE. OWNER'S SOLE AND EXCLUSIVE REMEDY IS PRODUCT REPAIR OR REPLACED, AS PROVIDED IN THIS LIMITED WARRANTY, AND ALL OTHER CLAIMS FOR DAMAGES ARE EXCLUDED.

THE REMEDIES SET FORTH IN THIS LIMITED WARRANTY ARE THE ONLY REMEDIES AVAILABLE TO OWNER OR ANY PERSON FOR BREACH OF ANY COVENANT, DUTY OR OBLIGATION ON THE PART OF MANUFACTURER. MANUFACTURER IS NOT LIABLE TO OWNER OR ANY THIRD PARTY FOR ANY LOSS, PERSONAL INJURY OR PROPERTY DAMAGE, DIRECTLY OR INDIRECTLY, ARISING FROM THE EEMAX TANKLESS WATER HEATER. UNDER NO CIRCUMSTANCES IS MANUFACTURER LIABLE TO OWNER OR ANY THIRD PARTY FOR INCIDENTAL, CONSEQUENTIAL, SPECIAL, CONTINGENT, OR PUNITIVE DAMAGES OF ANY DESCRIPTION, WHETHER ANY SUCH CLAIM BE BASED UPON WARRANTY, CONTRACT, NEGLIGENCE, STRICT LIABILITY, OR OTHER TORT, OR OTHERWISE.

SOME STATES DO NOT ALLOW THE EXCLUSION OR LIMITATION OF INCIDENTAL OR CONSEQUENTIAL DAMAGES, SO THE ABOVE LIMITATION OR EXCLUSION MAY NOT APPLY TO OWNER. IN SUCH CASES, THE WARRANTY SHALL BE LIMITED TO ONE YEAR FROM THE ORIGINAL DATE OF PURCHASE OR DATE OF MANUFACTURE, AS PROVIDED IN THIS LIMITED WARRANTY, OR THE SHORTEST PERIOD ALLOWED

BY LAW. THIS WARRANTY GIVES OWNER SPECIFIC LEGAL RIGHTS AND OWNER MAY ALSO HAVE OTHER RIGHTS WHICH MAY VARY FROM STATE TO STATE.

Exclusions of Coverage from this Limited Warranty:

1. Manufacturer is not liable for any water damage or other damages arising, directly or indirectly, from any defect in the Eemax Tankless Water Heater component part(s) or from its use.
2. Manufacturer is not liable under this limited warranty or otherwise if:
    a. The water heater or any of its component parts have been subject to misuse, alteration, neglect or accident; or
    b. The water heater has not been installed in accordance with the applicable local plumbing and/or building code(s) and/or regulation(s); or
    c. The water heater has not been installed or maintained in accordance with Manufacturer's printed instructions, or installed with improper orientation, improper fastening, improper use of pipe dope/plumbers putty or with the use of any non Manufacturer approved sealant; or
    d. The water heater has not been continuously supplied with potable water or the water's inlet temperature is above Manufacturer's recommended maximum temperature; or
    e. The water heater experiences any water pressure or flow interruptions, normal inlet water pressure is outside of the published specification for the heater; is exposed to any condition that causes the heater to turn on before the air is purged from the heater also know as dry fire; or
    f. The water heater has been exposed to conditions resulting from floods, earthquakes, winds, fire, freezing, lightning, or circumstances beyond the Manufacturer's control; or
    g. The water heater has been removed from its original installation location; or
    h. The water heater has been used for other than the intended purpose.
3. Owner, and not Manufacturer or its agent/representative, is liable for and shall pay for all field charges for labor or other expenses incurred in the removal and/or repair of the water heater or any expense incurred by Owner in order to repair the water heater.

Subject to the terms and conditions set forth in this limited warranty, if the Eemax Tankless Water Heater fails or leaks because of defects in materials or Manufacturer's workmanship during the applicable warranty period set forth above, Owner should contact Manufacturer for a Returned Merchandise Authorization (RMA). No returns will be accepted by Manufacturer without an RMA number and Manufacturer assumes no responsibility for a water heater returned without an RMA number. Water heaters should be wrapped and packaged securely to avoid shipping damage. All shipments of parts from the Manufacturer to the Owner to replace defective components shall be made via normal ground transportation. If expedited shipment is required, it will be provided at Owner's additional cost.