Shower -

Hand shower set with individual rosettes FlowReduce

Article number: 27 802 845-06 0010

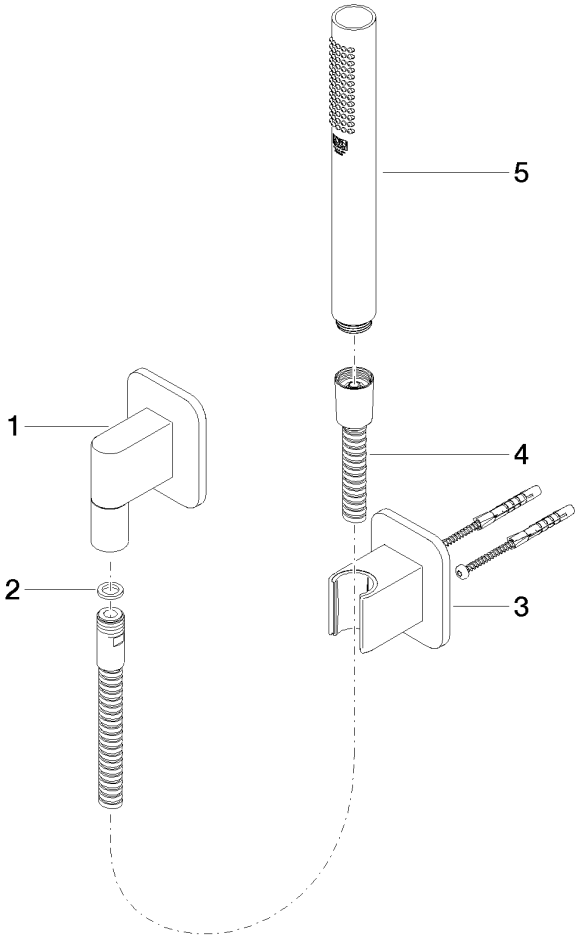

DORN BRACHT

Shower -
Hand shower set with individual rosettes FlowReduce
Article number: 27 802 845-06 0010

Spare parts list

Position	Quantity used	Item Number	Spare part	Delivery time
1	1	28 450 845-06	Wall elbow	10
2	1	90 14 20 026 00 90	seal	2
3	1	28 050 845-06	Wall bracket	10
4	1	90 30 02 072 00-06	Metal shower hose 1/2" x 3/8" x 1250 mm	10
5	1	90 12 11 140 30-06	shower	10