Operating and Installation Instructions
Speed Oven

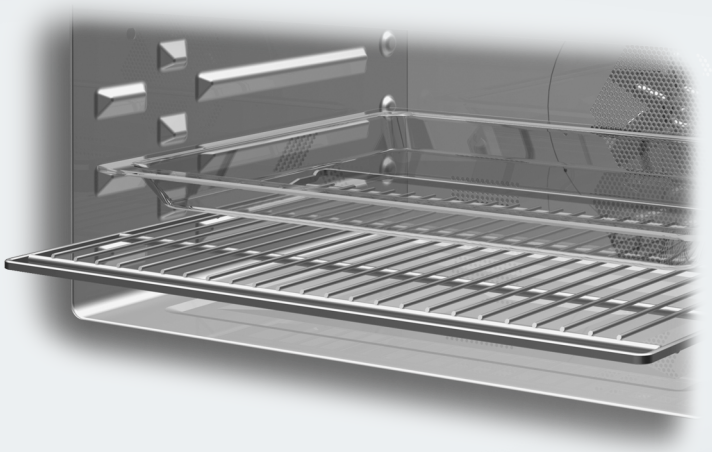

To prevent accidents and machine damage, read these instructions **before** installation or use.

en-US, CA

M.-Nr. 10 231 201

PRECAUTIONS TO AVOID POSSIBLE EXPOSURE TO EXCESSIVE MICROWAVE ENERGY

PRECAUTIONS TO AVOID POSSIBLE EXPOSURE TO EXCESSIVE MICROWAVE ENERGY

(a) Do not attempt to operate this oven with the door open since open-door operation can result in harmful exposure to microwave energy. It is important not to defeat or tamper with the safety interlocks.

(b) Do not place any object between the oven front and the door or allow soil or cleaner residue to accumulate on sealing surfaces.

(c) Do not operate the oven if it is damaged. It is particularly important that the oven door closes properly and that there is no damage to the: (1) door (bent), (2) hinges and latches (broken or loosened), (3) door seals and sealing surfaces.

(d) The oven should not be adjusted or repaired by anyone except properly qualified service personnel.

Contents

PRECAUTIONS TO AVOID POSSIBLE EXPOSURE TO EXCESSIVE MICROWAVE ENERGY 2

IMPORTANT SAFETY INSTRUCTIONS 8

Guide to the Speed Oven 20
H6700BM, H6800BM 20
H6770BM, H6870BM 21

Control panel 22
Sensor buttons 23
M Touch display 25
Symbols 26
Using the appliance 27

Features 29
Model numbers 29
Data plate 29
Items included 29
Standard and optional accessories 29
Glass Tray 29
Wire rack with non-tip safety notches 30
Oven controls 32
Oven safety features 32
System lock 🔒 32
Safety shutoff 32
Cooling fan 32
PerfectClean surfaces 33

Before first use 34
Standard settings 34
Heating the oven 36

Settings 37
Accessing the “Settings” menu 37
Changing and saving settings 37
Settings overview 38
Language ⚑ 40
Time of day 40
Display 40
Clock Type 40
Clock format 40
Setting 40
Date 41
Lighting 41

Contents

Start screen 41
Brightness 41
Volume 42
Buzzer tones 42
Keypad tone 42
Welcome melody 42
Units of measurement 42
Weight 42
Temperature 42
Minute + ... 43
Popcorn 43
Keeping Warm 44
Cooling fan 44
Recommended temperatures 45
Microwave power levels 45
Safety 46
System lock 46
Sensor lock 46
Calibrate temperature 46
Voltage 46
Showroom program 47
Demo mode 47
Factory default settings 47

MyMiele 48
To add an entry 48
Editing MyMiele 48
Deleting entries 48
Sorting entries 48

Alarm + Timer 49
Using the alarm 49
Setting the alarm 49
Changing an alarm 49
Deleting an alarm 49
Using the Timer 50
Setting the timer 50
Changing the timer 51
Deleting the timer 51

Guide to the modes 52
Solo Modes 52
Microwave (Solo) 54
Combination Modes 54

Microwave power 56
How it works 56
Microwave power levels 56

Selecting cookware 57
Containers suitable for microwave use 57
Unsuitable containers for microwave use 59
Testing dishes for their suitability 60
Placing the dish in the Speed Oven 61
Lid 61

Energy saving tips 63

Solo modes 64
Quick Guide 64
Cooling fan 64
Additional functions 65
Changing the temperature 65
Rapid PreHeat 66
Using the Crisp function (moisture reduction) 67
Changing the operating mode 67
Setting additional durations 68

Microwave (Solo) ≋ 71
Quick Guide 71
Cooling fan 71
Additional functions 72
Change the microwave power. 72
Changing the cooking duration 72
Changing the oven mode 72
Setting additional cooking durations 73

Combi Modes 75
Quick Guide 75
Cooling fan 76
Additional functions 76
Changing the microwave power level and temperature 77
Using the Crisp function (Moisture Reduction) 77
Changing the oven mode 77
Setting additional durations 77

Contents

MasterChef 78
List of food types 78
Using the MasterChef programs 78
Notes on using these programs 79
Search 79

Favorites 80
Creating a Favorite 80
Starting a Favorite 81
Changing Favorites 81
Changing cooking stages 81
Changing the name 82
Deleting a Favorite 82

Minute + ... 83

Popcorn 84

Bake 85

Roast 87
Roast Probe 89
How the roast probe works 89
When to use the roast probe 89
Important notes regarding the roast probe 90
Using the roast probe 90
Time-left display 91
Residual heat utilization 91

Slow Roasting 92
Using “Slow Roasting” special mode 93
Adjusting the Slow Roasting temperature manually 94

Broil 95

Microwave: Defrosting/Reheating/Cooking 97
Tables for defrosting, reheating and cooking food using the Microwave ≋ mode ... 101
Table for defrosting food 102
Table for reheating food 103
Table for cooking food 104

Special Modes 105
Defrost 105
Dehydrate 106
Reheat 107

Warm-up Cookware 107
Proof 108
Pizza 108
Sabbath Program 108
Gentle Bake 109
Canning 110
Frozen food 113

Cleaning and care 114
Unsuitable cleaning agents 114
Tips 115
Normal soiling 115
Roast Probe 115
Stubborn soiling 116
Lowering the Browning / Broiling element 117

Frequently Asked Questions 118

Technical Service 123
Contact in case of fault 123
Warranty 123

Caring for the environment 124

Electrical connection 125

Installation diagrams H6700BM, H6800BM 126
Appliance and cut-out dimensions 126
Installation in a tall cabinet 126
Undercounter installation 127
Combination installation with an oven into a tall cabinet 128
Front dimensions 129

Installation diagrams H6770BM, H6870BM 130
Appliance and cut-out dimensions 130
Installation in a tall cabinet 130
Undercounter installation 131
Combination installation with an oven into a tall cabinet 132
Front dimensions 133

Installation 134

Copyright and licenses 135

IMPORTANT SAFETY INSTRUCTIONS

When using the appliance, follow basic safety precautions, including the following:

Read all instructions before installation and use of the oven to prevent accidents and machine damage.

WARNING - To reduce the risk of burns, electric shock, fire, injury to persons, or exposure to excessive microwave energy:

This appliance complies with current safety requirements. Improper use of the appliance can lead to personal injury and material damage.

Read all instructions before installing or using the oven for the first time. Only use the appliance for its intended purpose.

Keep these operating instructions in a safe place and pass them on to any future user.

Read and follow the specific “PRECAUTIONS TO AVOID POSSIBLE EXPOSURE TO EXCESSIVE MICROWAVE ENERGY” found at the beginning of this manual.

Only use the appliance for its intended purpose. Install or locate this appliance only in accordance with the provided installation instructions and all local codes.

Appropriate use

▶ This appliance is intended for residential use only. Use only as described in these operating instructions.

▶ This appliance is not intended for outdoor use.

▶ The oven is intended for domestic use only: cooking, baking, roasting, broiling, canning, defrosting and reheating of food.
Only use this appliance for its intended purpose.

▶ Risk of fire! Do not use the speed oven to store or dry items which could ignite easily.
If such items were dried in the Speed Oven, the moisture in the item would evaporate causing it to dry out and even self-ignite.

▶ Persons who lack physical, sensory or mental abilities, or experience with the appliance should not use it without supervision or instruction by a responsible person.

Safety with children

▶ Children should not be left alone or unattended in an area where an oven is in use. Never allow children to operate, sit or stand on any part of the oven. **Caution:** Do not store items of interest to children in cabinets above an oven. Children climbing on the oven to reach these items could be injured.

▶ Burn Hazard - Do not allow children to use the oven.

▶ Danger of suffocation! Ensure that any plastic wrappings, bags, etc. are disposed of safely and kept out of the reach of children.

▶ Danger of burns. The oven gets hot at the oven door glass, the vapor vent, the handle and the operating controls. Do not allow children to touch or play in, on or near the oven.

Technical safety

▶ This appliance must be installed and connected in compliance with the installation instructions.

▶ Unauthorized installation, maintenance, and repairs can cause considerable danger for the user. Installation, maintenance, and repairs must only be carried out by a Miele authorized technician.

▶ Maintenance by the user: Never repair or replace any part of the appliance unless the instructions specifically recommend doing so. Service work should only be performed by a qualified technician.

IMPORTANT SAFETY INSTRUCTIONS

▶ Before installing the oven, check for externally visible damage. Do not operate a damaged appliance.

▶ Reliable and safe operation of the oven can only be guaranteed if it is connected to the power supply.

▶ Operating a damaged appliance can result in microwave leakage and present a hazard to the user. Do not use the appliance if:

- the door is warped or bent,
- the door hinges are loose,
- holes or cracks are visible in the housing, the door, the door seal or the oven interior walls.

▶ To guarantee the electrical safety of this appliance, continuity must exist between the appliance and an effective grounding system. This appliance must be grounded. Connect only to properly grounded outlet. See “Electrical connection - GROUNDING INSTRUCTIONS”. It is imperative that this basic safety requirement be met. If there is any doubt, have the electrical system of the house checked by a qualified electrician.

▶ Proper installation: Make sure that your appliance has been installed correctly and that it has been grounded by a qualified technician.

▶ Before installation, make sure that the voltage and frequency listed on the data plate correspond with the household electrical supply. This data must correspond to prevent injury and machine damage. Consult a qualified electrician if in doubt.

▶ Before installation or service, disconnect the power supply to the work area by

- removing the fuse,
- “tripping” the circuit breaker, or
- unplugging the unit. Pull the plug not the cord.

▶ Extension cords do not guarantee the required safety of the appliance (e.g. danger of overheating). Do not use an extension cord to connect this appliance to electricity.

▶ The oven is not to be operated until it has been properly installed within cabinetry.

▶ Danger of electric shock!
Under no circumstances open the outer casing of the appliance.

▶ This appliance must not be used in a non-stationary location (e.g. on a ship).

▶ Do not repair or replace any part of the appliance unless specifically recommended in the operating instructions. All other servicing should be referred to a qualified technician.

▶ Defective components should be replaced by Miele original parts only. Only with these parts can safety of the appliance be assured as intended by the manufacturer.

▶ In order for the oven to function correctly, it requires an adequate supply of cool air. Ensure that the air flow is not impaired (e.g. insulation in the cabinetry). Also be sure that the cool air supply is not heated by other sources nearby.

▶ If the oven is installed behind a cabinet door, do not close the door while the oven is in operation. Heat and moisture can build up behind the closed door and cause damage to the oven, cabinetry and flooring. Do not close the door until the oven has completely cooled down.

Correct use

⚠ Danger of burns!
The Speed Oven becomes hot when in use.
Depending on the mode selected, you could burn yourself on the heating elements, oven interior, cooked food or oven accessories. Wear pot holders when placing food in or removing food, or when making adjustments to items being cooked in the hot Speed Oven.

▶ Caution: Heating elements may be hot even though they are not glowing. Interior surfaces of an oven become hot enough to cause burns. External parts of the oven such as the door glass, vents, and the control panel can become hot. During and after use, do not touch, or let clothing or other flammable materials come into contact with heating elements or interior surfaces of the oven until they have had sufficient time to cool.

▶ Do not let food sit in the oven for an extended period of time before or after cooking. Doing so can result in food poisoning or sickness.

▶ It is important that the heat is allowed to spread evenly throughout the food being cooked.
This can be achieved by stirring and/or turning the food, and observing a sufficiently long standing time, which should be added to the time needed for cooking, reheating or defrosting.

▶ Use only dry, heat-resistant potholders. Moist or damp potholders used on hot surfaces may result in steam burns. Do not let potholders come in contact with oil or grease. Do not substitute dish towels or other bulky items for potholders. Do not let potholders touch hot heating elements.

▶ Loose fitting or hanging garments present a fire hazard. Wear proper apparel while operating the appliance.

▶ Do not heat unopened containers of food in the oven, pressure may cause the containers to burst and result in injury.

▶ To prevent burns, always place oven racks at their desired height while the oven is cool. If the rack must be moved while the oven is hot, do not let pot holders touch hot heating elements.

▶ Open the door carefully to allow hot air or steam to escape before placing or removing food.

▶ To prevent burns, allow the heating elements to cool before cleaning by hand.

▶ Do not leave the oven door open unnecessarily as someone may trip over it or be injured by it.

▶ Never leave the appliance unattended when cooking with oil or fat. They can ignite if overheated. Do not use the oven for frying. Do not use water on grease fires. Turn off the Speed Oven immediately and suffocate the flames by keeping the door closed.

▶ Never store flammable liquids and materials in, above or under an oven, or near cooking surfaces.

▶ To avoid fueling any flames, do not open the Speed Oven door if smoke occurs inside the appliance. Interrupt the process by turning the appliance off and disconnecting it from the power. Do not open the door until the smoke has dissipated.

▶ Do not use the oven to heat the room. The high temperatures radiated could cause objects near the oven to catch fire.

⚠ WARNING
NEVER use this appliance as a space heater to heat or warm the room. Doing so may result in carbon monoxide poisoning and overheating of the oven.

⚠ WARNING
NEVER use this appliance as storage space. Doing so may result in carbon monoxide poisoning and overheating of the oven.

⚠ WARNING
NEVER cover any slots, holes or passages in the oven bottom or cover an entire rack with materials such as aluminum foil. Doing so blocks air flow through the oven and may cause carbon monoxide poisoning. Aluminum foil linings may also trap heat, causing a fire hazard.

▶ Please be aware that durations for using microwave power are often considerably shorter when cooking, reheating and defrosting than when using modes without microwave power. Excessively long cooking times can lead to food drying out and burning or could even cause it to catch fire.
Be sure you keep to recommended broiling times when using the "Broil" mode. Do not use the "Microwave" ≋ mode for dehydrating items such as flowers, herbs, bread, or rolls. Never use "Broil" modes for pre-baked products such as bread or rolls or for drying flowers or herbs. Use "Convection Bake" ⅄ for these items and monitor the process carefully.

▶ Use caution when using alcohol in your recipes. Alcohol evaporates at high temperatures but may, in rare circumstances, combust on the hot heating elements.

▶ Dishes with hollow knobs or handles are not suitable for use with microwave modes. Moisture which has gathered in the hollow recesses can cause pressure to build up and the item can explode.

▶ Fire hazard! Using Microwave ≋ or Microwave combination modes with plastic dishes which are not microwave safe can cause them to melt and damage the appliance.
Do not use any containers or cutlery made from or containing metal, aluminum foil, lead, crystal glassware, temperature-sensitive plastics, wooden utensils or cutlery, metal clips or plastic or paper covered wire ties. Do not use plastic containers with the foil lid only partially removed (see "Containers suitable for microwave use").

▶ For modes without microwave power: Plastic containers which are not suitable for use in an oven can melt at high temperatures and can even damage the oven or catch fire.
Only use containers which are declared by the manufacturer as being suitable for use in an oven. Follow the manufacturer's instructions on use.

▶ Do not leave the microwave oven unattended when reheating or cooking food in disposable containers made of plastic, paper or other inflammable materials.
Before using single-use containers, make sure they are suitable for use in microwave ovens (See “Containers suitable for microwave use - Plastics”).

▶ Do not reheat food in the oven in heat-retaining bags which are intended for use in normal ovens.
These heat-retaining bags usually contain a thin layer of aluminum foil which reflects microwaves.This reflected energy can, in turn, cause the outer paper covering to become hot and ignite.

▶ The Speed Oven can be damaged when using Microwave or Microwave Combination modes if it is empty or incorrectly loaded. For this reason please do not use modes with microwave power to pre-heat cookware or to dry herbs.
Instead use Convection Bake or Surround for these procedures.

▶ When using residual heat to keep food in the oven warm, the high humidity and amount of condensation in the Speed Oven can cause corrosion. The control panel, the countertop or the cabinetry can also suffer damage.
Always cover food when using Microwave. Once food is cooked through, use a lower power for continued cooking to reduce the amount of steam produced from the food. When using residual heat do not turn the Speed Oven off. Instead set the temperature to the lowest setting and leave the oven on the selected mode. The fan will then remain on automatically and dissipate the moisture.

▶ It is recommended to cover all cooked food that is left in the oven to be kept warm. This will prevent moisture from condensing on the interior of the oven.

▶ A build-up of heat can cause damage to the enamel on the floor of the oven.
When using Surround, Bake, Intensive or Convection Bake, do not line the floor of the oven with anything, e.g., aluminum foil or protective liners. Do not place any pans or trays directly on the oven floor.

▶ The door can support a maximum weight of 17.5 lbs (8 kg). Do not sit on or lean against an open door, and do not place heavy objects on it. Also make sure that nothing can get trapped between the door and the oven cavity. The oven could get damaged.

▶ When heating food and drinks, remember that the heat is created in the food itself, and that the container will normally be cooler. The dish is only warmed by the heat of the food. The temperature of the container is not an indication of the temperature of the food or liquid in it.
Check the food for the desired temperature after removing it. **This is particularly important when preparing food for babies.** Shake or stir baby milk and food thoroughly after heating, and try it for temperature to ensure that it will not scald the baby.

▶ The Speed Oven is not suitable for cleaning or disinfecting items. Items can get extremely hot and there is a danger of burning when the item is removed from the appliance.

▶ Do not cook or reheat food or liquids in sealed containers, jars or bottles. With baby bottles, the screw top and nipple must be removed.
Otherwise pressure will build up which can cause the bottle or container to explode. Risk of injury.

▶ When boiling and in particular when re-heating liquids, milk, sauces etc., using microwave power without a boiling rod, the boiling point of the liquid may be reached without the production of typical bubbles. The liquid does not boil evenly throughout. This so-called 'boiling delay' can cause a sudden build up of bubbles when the container is removed from the oven or shaken. This can lead to the liquid boiling over suddenly and explosively. Danger of scalding and burning! The formation of bubbles can be so strong that the pressure forces the oven door open, with a danger of injury and damage.
Before cooking or reheating, thoroughly stir the liquid. Then wait at least 20 seconds before removing the container from the oven. During cooking and reheating you can also place a glass rod or similar in the container and use as a boiling rod, if available.

▶ Eggs can be cooked without their shells using microwave power only if the yolk membrane has been punctured several times first. The pressure could otherwise cause the egg yolk to explode.

▶ Eggs in their shells will explode if cooked with microwave power, even after taking them out of the oven.
They can only be cooked in their shells using microwave heat in a specially designed egg-boiling device available from specialist shops. Hard-boiled eggs must not be reheated in the microwave oven either as they too will explode.

▶ Food with a thick skin or peel, such as tomatoes, sausage, potatoes and eggplant, should be pierced or cut in several places to allow steam to escape and prevent the food from bursting.

▶ To check food temperature, first interrupt the cooking process. Only use a thermometer specifically approved for food use to measure the temperature of the food. Do not use a thermometers containing mercury or liquid as these are not suitable for use with very high temperatures and break very easily

▶ Do not use the oven to heat up heating pads filled with grains, gel, etc.
These pads can ignite even after they have been removed from the Speed Oven.

▶ This oven must only be used for cooking food. Fumes, vapors or heat given off by glues, plastics or flammable liquids and materials could be hazardous. Do not use it as a dryer, kiln, dehumidifier, etc.

▶ Do not obstruct the flow of combustion and ventilation air.

▶ Do not let metal objects (aluminum foil, pans) come in contact with the heating element.

▶ Make certain that the power cords of small appliances do not come in contact with or get caught in the oven door.

Cleaning and maintenance

▶ Do not use a steam cleaner to clean this oven.
Steam could penetrate electrical components and cause a short circuit.

▶ Only clean parts listed in these Operating and Installation Instructions.

▶ Scratches on the door glass can cause the glass to break.
Do not use abrasive cleaners, hard sponges, brushes or sharp metal tools to clean the door glass.

▶ To avoid corrosion on the stainless steel surfaces of the Speed Oven, remove any splashes on the interior walls of the oven from food or liquids containing salt.

▶ Do not use a protective coating to line the oven and do not use commercial oven cleaner unless certified for use in a self-cleaning oven.

Accessories

▶ Use only genuine original Miele parts. If parts or accessories from other manufacturers are used, the warranty will become void.

▶ Only use the Miele roast probe supplied with this oven. If it is faulty, it must only be replaced with a Miele genuine roast probe.

▶ The plastic on the roast probe can melt at very high temperatures. Do not use the roast probe when using the broil functions (exception: Convection Broil). Do not store the roast probe in the oven if it is not in use.

SAVE THESE INSTRUCTIONS AND REVIEW THEM PERIODICALLY

Guide to the Speed Oven

H6700BM, H6800BM

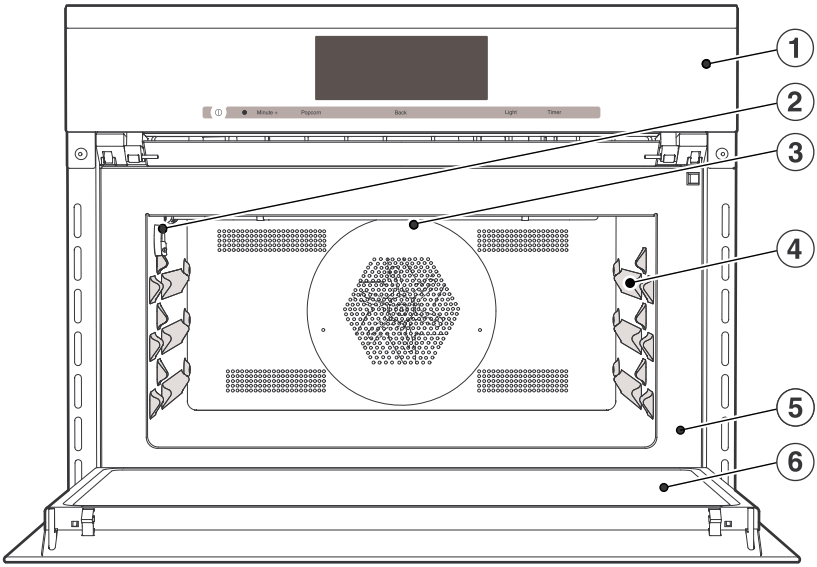

① Control panel

② Connection socket for the roast probe

③ Browning / Broiling element

④ 3 Shelf levels for the glass tray and rack

⑤ Front frame with data plate

⑥ Door

H6770BM, H6870BM

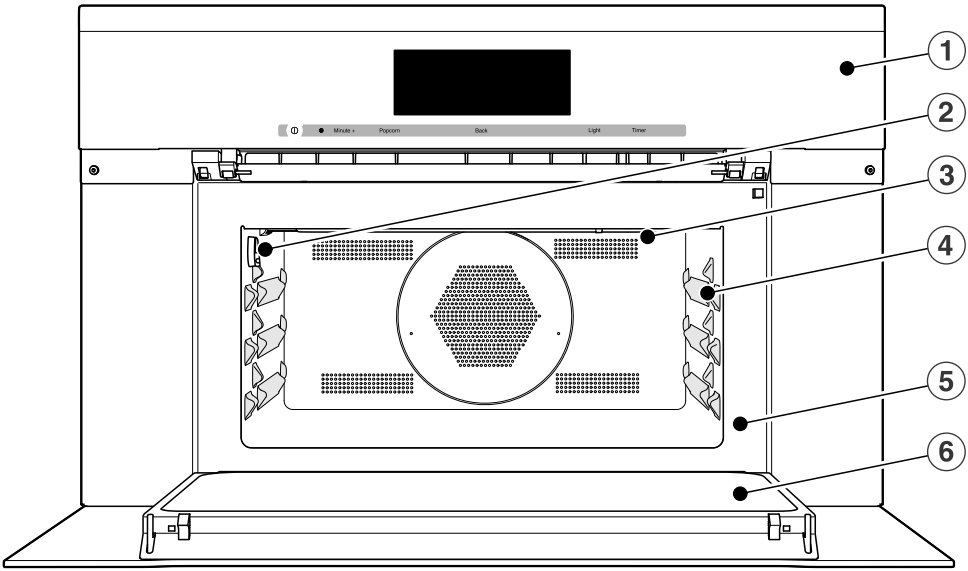

① Control panel

② Connection socket for the roast probe

③ Browning / Broiling element

④ 3 Shelf levels for the glass tray and rack

⑤ Front frame with data plate

⑥ Door

Control panel

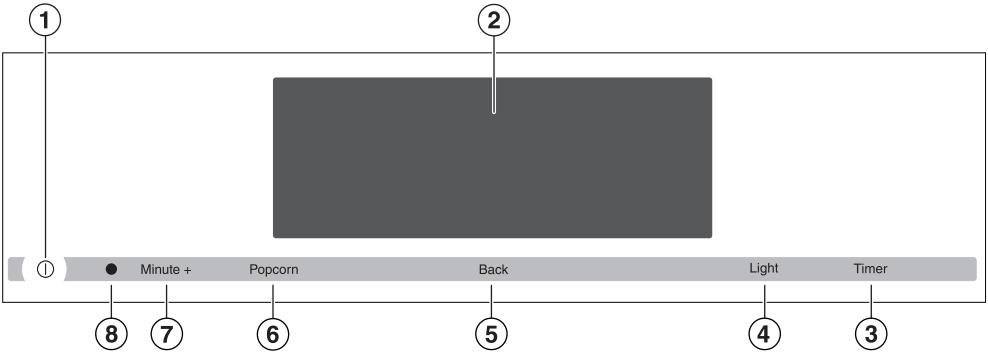

① On / Off button ⏻
To turn the appliance on and off

② Display
Displays the time of day and information on operation

③ “Timer” sensor button
To set the timer

④ “Light” sensor button
To turn the oven interior lighting on and off

⑤ “Back” sensor button
To go back one step at a time

⑥ “Popcorn” sensor button
To start the “Popcorn” function

⑦ “Minute +” sensor button
To start the “Minute +” function

⑧ Optical interface
(for service technician use only)

Sensor buttons

The sensors react to touch. Each touch is confirmed with an audible tone. This tone can be turned off (see “Settings – Volume - Keypad tone”).

Sensor button	Function	Notes
Timer	For activating and deactivating timer / alarm	If a menu appears in the display or if cooking is in progress, you can enter a timer duration (e.g. when boiling eggs on the cooktop) or an alarm time, i.e. a specific time, at any point (see “Alarm + Timer”). If the display is turned off, the “Timer” button will not react until the oven is turned on.
Light	For turning the oven cavity lighting on and off	If a menu appears in the display or if a cooking procedure is in progress, tapping the “Light” button will turn the oven cavity light on or off. If the display is turned off, the “Light” button will not react until the oven is turned on. The oven cavity lighting turns off after 15 seconds during cooking or remains constantly turned on, depending on the setting selected.
Back	To go back a step	

Sensor button	Function	Notes
Popcorn	“Popcorn” function	The microwave starts at power level 6 and a cooking time of 3 minutes (see the “Popcorn” chapter). This function can only be used when no other cooking programs are in use.
Minute +	“Minute +” function	The microwave function starts at maximum power (1000 W) and a cooking time of 1 minute (see “Minute +”). Touching the sensor button repeatedly increases the cooking time. This function can only be used when no other cooking programs are in use.

M Touch display

The display can be scratched by pointed or sharp objects, e.g. pens and pencils.
Only touch the display with your fingers.

Touching the display with your finger emits a small electrical charge which in turn triggers an electrical pulse that is detected by the surface of the Touch display.

The Touch display is divided into three areas.

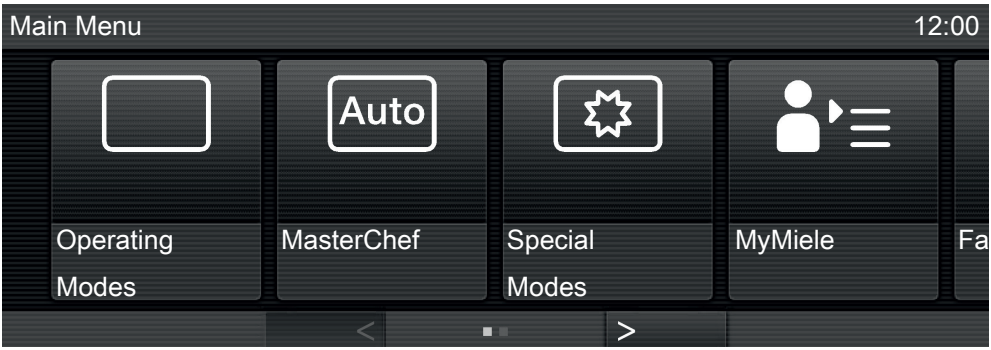

The top line shows what menu level you are currently in. Options within a menu are separated by a vertical line. If there is not enough space to show the whole path, additional options are indicated by … **I**. The Time of Day, Alarm ⏰ and Timer 🔔 are shown in the top right-hand corner of the display.

The middle section shows the current menu and menu items. You can scroll to the right or left by swiping your finger across the display.

The < and > arrows at the bottom of the screen are used for scrolling to the left or right. The number of small squares between the arrows indicates the number of pages available and your position within the current menu.

Symbols

The following symbols may appear in the display:

Symbol	Description
	Some settings, e.g. display brightness and buzzer volume, are selected using a bar chart.
i	This symbol indicates that there is additional information and advice about using the oven. Select *OK* to access the information.
	The system lock or sensor lock is active (see “Settings – Safety”). The oven cannot be used.
	Alarm
	Timer
	Core temperature when using the roast probe

Using the appliance

Whenever you touch a possible option the relevant field will light up orange.

To select or open a menu

- Touch the desired field to select it.

Scrolling

You can scroll left or right.

- Swipe the screen, i.e., place your finger on the touch display and move it in the desired direction.
- Or: touch the < and > arrows with your finger to scroll left or right.

Exiting a menu

- Touch “Back”, select an option in the menu path at the top of the screen, or touch … **I**.

Depending on the current menu, this will take you back one level or return you to the Main Menu.

Help function

With some functions and options Help appears.

- Select the function.

Helpful information will then appear in text and pictures.

Entering numbers

You can enter numbers by scrolling through and touching the roller, or by using the numeric keypad.

To enter numbers using the roller:

- Swipe the roller up or down to select the desired number.

To enter numbers using the numeric keypad:

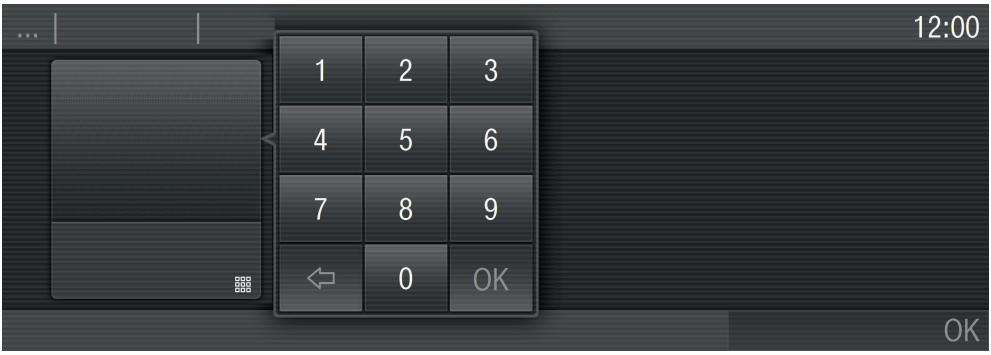

- Touch ⠿ in the bottom right of the input field.

The numeric keypad appears.

- Touch the required numbers.

Once you have entered an accepted value, the *OK* field will light up green.
Use the arrow to delete the last entered number.

- Touch *OK*.

Entering letters

Names are entered using a keyboard. It is best to select short, concise names.

- Select the required letters or characters.
- Touch Save.

Model numbers

A list of the ovens described in these operating instructions can be found on the back page.

H6700BM, H6800BM:
Width: 23 7/16" (595 mm)

H6770BM, H6870BM:
Width: 29 13/16" (757 mm)

Data plate

The data plate located on the front frame of the oven is visible when the door is open.

Printed on the data plate are the model number, serial number and the connection data (voltage/frequency/ maximum rated load) of the oven.

Have this information available when contacting Miele Technical Service.

Items included

The following items are included with this appliance:

- The operating and installation instructions for using the Speed Oven
- Screws for securing your appliance into the cabinetry
- Various accessories

Standard and optional accessories

This Speed Oven is supplied with a glass tray, rack and roast probe.

All accessories and cleaning and care products in these instructions are designed to be used with Miele ovens.

These can be ordered from the Miele web store, Miele Technical Service, or from your Miele dealer.

When ordering, please have ready the model number of your oven and of the desired accessories.

Glass Tray

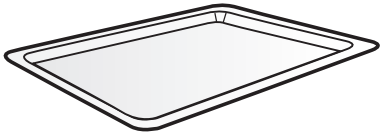

The glass tray is suitable for use with all operating modes.

Always use the glass tray when using Microwave (Solo) [≋].

Do not place items weighing more than 17.5 lbs (8 kg) on it.

Do not place the hot glass tray on a cold surface, such as a tiled or granite countertop. The glass tray could get damaged. Use a suitable heat-resistant mat or pot rest.

Wire rack with non-tip safety notches

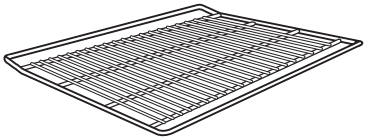

The rack is only suitable for cooking in Combination modes and modes that do not use microwave. It is **not suitable** for cooking in the Microwave (Solo) [≋] mode.

Danger of burns! The rack gets hot during the cooking process.
Use pot holders when placing food in and taking food out of a hot oven.

Use of the rack with the Microwave (Solo) [≋] mode can cause damage to the oven and rack due to possible sparking. The rack should be used on a shelf level. Do not place it on the floor of the oven.

Do not place items weighing more than 17.5 lbs (8 kg) on the rack.

The rack has non-tip safety notches which prevent it being pulled completely out when it only needs to be pulled out partially.

When pushing the rack back in, always ensure that the safety notches are at the **back** of the oven.

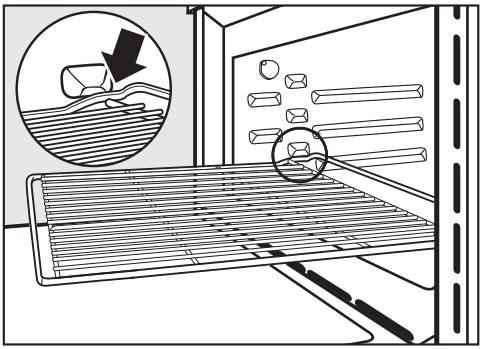

- To remove the rack, lift it upwards slightly at the front when the safety notches connect with the sides of the oven.

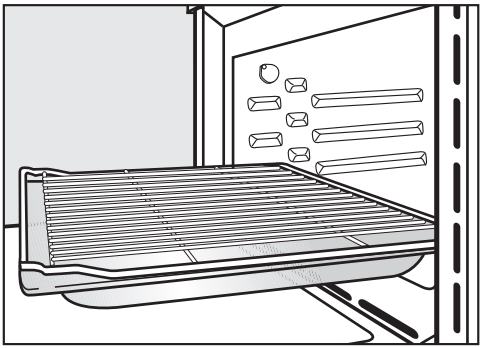

- We recommend using the rack together with the glass tray when cooking items on the rack which might drip.

Roast Probe

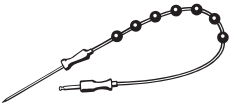

Using the roast probe enables you to accurately monitor the temperature during the cooking process (see “Roasting - Roast probe”).

Round Baking Form HBF 27-1

Microwave modes will damage the Round Baking Form.
Do not use the round baking form when using Microwave (Solo) ≋ or Combi modes.

This circular form is suitable for cooking fresh or frozen pizzas, flat cakes, tarts and baked goods.

Place the round baking form on the rack.

The surface has been treated with PerfectClean enamel.

Miele Oven Cleaner

Miele oven cleaner is suitable for removing stubborn soiling. It is not necessary to preheat the oven before use.

Oven controls

The oven controls enable you to use the various oven modes to bake, roast, broil, and reheat.

They also allow you to access:

- Time display
- Timer
- Settings to turn cooking processes on and off automatically
- Settings to use automatic programs
- Settings to create Favorites
- Custom settings

Oven safety features

System lock 🔒

The system lock prevents the oven from being used unintentionally (see “Settings - System lock”).

The system lock will remain activated even after a power failure.

Safety shutoff

A **mode without microwave** can be started without selecting a cooking duration. To prevent continuous use and avoid the risk of fire, the oven will turn itself off automatically after a time between 1 hour and 12 hours depending on the mode and temperature selected.

If a **combi mode** is followed in quick succession by another program using microwave power, the magnetron (which produces the microwaves) cannot be turned on again until approx. 10 seconds have elapsed. Therefore, wait a short time before starting the second process.

Cooling fan

The cooling fan comes on automatically when a cooking program is started. The cooling fan mixes hot air from the oven cavity with cool room air before venting it out into the kitchen through vents located between the appliance door and the control panel.

The cooling fan will continue to run for a while after a cooking process to prevent moisture building up in the oven, on the control panel or on the surrounding cabinetry. It will turn itself off automatically after a while.

PerfectClean surfaces

The revolutionary PerfectClean finish is a smooth, non-stick surface that is exceptionally easy to clean.

Food and grime from baking or roasting are easily removed.

Do not use ceramic knives, as these will scratch the PerfectClean surface.

Follow the instructions in the “Cleaning and Care” section of this manual so the anti-stick and easy cleaning properties are retained.

The oven compartment and the rack have a PerfectClean finish.

Standard settings

⚠ The oven must not be operated until it has been properly installed within cabinetry.

The oven will turn on automatically when it is connected to the power supply.

Welcome screen

A welcome greeting is displayed. You will then be asked to select some basic settings which are needed before the appliance can be used.

- Follow the instructions on the display.

Setting the language

- Select the desired language.
- Confirm with *OK*.

Setting the country

- Select the desired country.
- Confirm with *OK*.

Setting the voltage (electrical version)

⚠ The voltage set must match that of the house as to not damage the oven.
Confirm the voltage before setting. If in doubt contact a qualified technician.

- Select the voltage.
- Confirm with OK.

Setting the date

You can enter numbers by scrolling through and touching the roller, or by using the numeric keypad.

- Set the day, then the month, and finally the year.
- Confirm with *OK*.

Setting the time of day

You can enter numbers by scrolling through and touching the roller, or by using the numeric keypad.

- Set the time of day in hours and minutes.
- Confirm with *OK*.

The time of day can be displayed in 12-hour format (see “Settings – Time of Day – Clock Format”).

Time display

You will then be asked how you want the time of day to show in the display when the oven is turned off (see “Settings – Time of day – Display“).

– On

The time is always visible in the display.

– Off

The display appears dark to save energy. Some modes are limited.

– Night Dimming

The time only shows in the display between 5:00 am and 11:00 pm. It turns off at night to save energy.

- Select the desired option.
- Confirm with *OK*.

Information regarding energy consumption will appear in the display.

- Confirm with *OK*.
- Follow any further instructions in the display.

Set-up Successfully Completed is displayed.

- Confirm with *OK*.

The oven is now ready to use.

If you accidentally select the wrong language, follow the instructions described in “Settings – Language ⚑”.

Heating the oven

New ovens may have a slight odor during their first use. Heating up the oven for at least one hour with nothing in it will eliminate the odor.

Ensure that the kitchen is well ventilated while the appliance is being heated up for the first time. Close doors to other rooms to prevent the smell spreading throughout the house.

- Remove any protective wrapping and sticky labels from the oven.
- Take all accessories out of the oven and clean them (see “Cleaning and care”).
- Before heating the oven up, wipe the interior with a damp cloth to remove any dust or bits of packaging that may have accumulated in the oven cavity during storage and unpacking.
- Turn the oven on using the On/ Off button ⏻.

The main menu will appear.

- Select Operating Modes ▭.
- Select Convection Bake ⁂.

The default temperature is displayed (350°F/160°C).

The oven heating, lighting, and cooling fan will turn on.

- Set the highest possible temperature (475°F/250°C).
- Confirm with *OK*.

Heat up the oven for at least an hour.

After at least one hour:

- Turn the oven off using the On/ Off button ⏻.

After heating up for the first time

⚠ Danger of burning! Allow the oven to cool before cleaning.

- Turn the oven on using the On/ Off button ⏻.
- Select ☼ to turn on the oven light.
- Clean the oven cavity with warm water and liquid dish soap, applied with a soft sponge or cloth.
- Dry all surfaces with a soft cloth.
- Turn the lighting and the oven off.

Leave the oven door open until the oven cavity is completely dry.

Accessing the “Settings” menu

From the main menu.

- Select Settings.

The settings can now be checked or changed.

Settings cannot be altered while a cooking program is in progress.

Changing and saving settings

- Select Settings.
- Swipe across the screen until the desired setting appears, then touch it to select.

The settings which are currently selected will have a colored frame around them.

- Swipe across the screen until the desired option appears, then touch it to select it.
- Confirm with *OK*.

The setting is now saved.

Settings overview

Option	Available settings
Language ⚑	... / deutsch / english / ... Country
Time	Display On / Off * / Night Dimming Clock Type Analog * / Digital Clock Format 24 h / 12 h (am/pm) * Set
Date	
Lighting	On / On for 15 seconds *
Start Screen	Main Menu Operating Modes MasterChef Special Modes MyMiele Favorites
Brightness	▬▬▬▬═══
Volume	Buzzer Tones Keypad Tone Welcome Melody
Units of Measurement	Weight g / lb / lb/oz * Temperature °C / °F *
Quick Microwave	Power Level Duration
Popcorn	Duration
Keeping Warm	On Off *

* Factory default

Option	Available settings
Cooling Fan	Time Controlled Temperature Controlled *
Recommended temperatures	
MW Power Levels	
Safety	System Lock 🔒 On / Off * Sensor Lock On / Off *
Calibrate Temperature	▬▬▬▬▬▬▬
Electrical Version	208V / 60Hz 220V / 60Hz 240V / 60Hz
Showroom Program	Demo Mode On / Off *
Factory Default	Settings Favorites MW Power Levels Recommended temperatures MyMiele

* Factory default

Language ⚑

The desired country and language can be set.

After selecting and confirming your choice, the language selected will appear in the display.

Tip: If you accidentally select a language you do not understand, select Settings and use the ⚑ symbol to return to the Language ⚑ submenu.

Time of day

Display

Select how you would like the time of day to appear in the display when the oven is turned off:

– On

The time of day will always appears in the display. To turn the light on and off or use the Alarm + Timer, Minute + or Popcorn functions, tap the respective sensor button.

– Off

The display is turned off to save energy. The oven has be to be turned on before you can use it. This also applies when using the Alarm + Timer, Light, Minute + and Popcorn.

– Night Dimming

To save energy, the time is only visible on the display between 5:00 am and 11:00 pm. The rest of the time it is not visible.

Clock Type

You can choose from an analogue clock face or a digital (h:min) display.

The date will also appear in the digital clock display.

Clock format

You can select the clock format for the time of day:

– 24 h

The time of day is shown in a 24 hour clock format.

– 12 h (am/pm)

The time of day is shown in a 12 hour clock format.

Setting

Set the hours and the minutes.

If there is a power failure, the current time of day will reappear once the power has been restored. The time is stored in memory for about 200 hours.

Date

Set the date.

When the oven is turned off, the date only appears if the oven is set to “Time – Clock Type – Digital”.

Lighting

– On
The interior lighting is switched on during the entire cooking period.

– On for 15 seconds
The oven lighting switches off 15 seconds after a program starts. Touching ☼ switches it on for another 15 seconds.

Start screen

The oven is factory-set for the main menu to appear when the oven is turned on. You can change this default setting so that, for instance, the oven modes or MyMiele settings appear in the display (see “MyMiele”).

Brightness

The display brightness is represented by a bar with seven segments.

■ Select Darker or Lighter to change the brightness of the display.

Volume

Buzzer tones

The volume is represented by a bar with seven segments.

▬▬▬▬═══

Maximum volume is selected when all segments are filled. If none of the segments are filled, the volume is switched off.

- Select Quieter or Louder, to adjust the volume.
- Select On or Off to switch the buzzer tones on or off.

Keypad tone

The volume is represented by a bar with seven segments.

▬▬▬▬═══

Maximum volume is selected when all segments are filled. If none of the segments are filled, the volume is switched off.

- Select Quieter or Louder, to adjust the volume.
- Select On or Off, to switch the keypad tone on or off.

Welcome melody

You can turn the welcome melody on or off. It sounds when the On / Off button ⏻ is touched.

Units of measurement

Weight

– g
  The weight of food in MasterChef programs is shown in grams.

– lb
  The weight of food in MasterChef programs is shown in pounds.

– lb/oz
  The weight of food in MasterChef programs is shown in pounds/ ounces.

Temperature

– °C
  The temperature is displayed in Celsius.

– °F
  The temperature is displayed Fahrenheit.

Minute +

For the immediate start of the microwave, the maximum power level 7 and a cooking time of 1 minute are preset. The power level is indicated by a bar with seven segments.

If all segments are illuminated, the maximum power level is selected.

– Power Level

  You can set the power level between 1 and 7.

– Duration

  The maximum cooking time that can be set depends on the power level selected:
  Power levels 1 through 3: maximum of 10 minutes
  Power levels 4 through 7: maximum 5 minutes

■ Select Lower or Higher to set the power level.

Popcorn

For the immediate start of the microwave to prepare popcorn, power level 6 and a cooking time of 3 minutes are preset. This is suitable for the preparation of most brands of microwave popcorn.

You can change the cooking time, but not the microwave power level.

– Duration

  The maximum cooking time that can be set is 4 minutes.

Keeping Warm

– On

The Keeping Warm function is activated in the Microwave mode ≋ if at least power level 4 and a minimum cooking time of 10 minutes is selected.
If food is not removed from the oven at the end of a program, the Keeping Warm function will automatically start after approx. 5 minutes. Keeping Warm will appear in the display and the food will be kept warm for approx. 15 minutes using power level 2. The keeping warm phase is canceled if the door is opened during this time.

– Off

The Keeping Warm function is deactivated.

Cooling fan

The cooling fan will continue to run for a while after the oven has been switched off to prevent any humidity building up in the oven, on the control panel, or in the cabinet niche.

– Temperature Controlled
The cooling fan switches off when the temperature in the oven drops below approx. 160°F (70°C).

– Time Controlled
The cooling fan switches off after a period of about 25 minutes.

Condensation can damage the cabinet carcase and the countertop. This could lead to corrosion of the appliance.
When keeping food warm in the oven, increases to the Time Controlled setting can lead to condensation of the control panel and moisture on the countertop and cabinetry.
Do not adjust the Time Controlled setting and try not to leave food in the warm oven.

Recommended temperatures

If you often cook with temperatures that differ from the default, it makes sense to change the recommended temperatures.

After selecting this option, a list of oven modes will appear in the display.

- Select the desired mode.

The recommended temperature is displayed along with the available temperature range.

- Change the recommended temperature.
- Confirm with *OK*.

Microwave power levels

If you often cook with microwave power levels that differ from the default, it makes sense to change the default temperatures.

The default power levels can be changed for Microwave ≋ and Microwave Combi modes.

After you select this menu item, a list of mode will appear together with their respective default power levels.

– Microwave ≋:
  Power level 1 through 7 (can be set via a bar with 7 segments)

– Combined modes:
  Power levels 1 through 3 (can be set using a number wheel)

- Select the desired mode.
- Change the default power level.
- Confirm with OK.

Safety

System lock 🔒

The system lock prevents the oven being turned on inadvertently.

The system lock will remain activated even after a power failure.

Select On to activate the system lock.

The alarm and timer can still be set when the system lock is active.

– On
  The system lock is now active. If you want to use the oven, touch 🔒 for at least 6 seconds.

– Off
  The system lock is now deactivated. You can use the oven as normal.

Sensor lock

The sensor lock prevents users from accidently turning the oven off or changing a cooking program. Once activated, the sensor lock prevents the sensor buttons and fields in the display from working for a few seconds after a program has been started.

– On
  The sensor lock is active. Before you can use a mode, you must touch 🔒 for at least 6 seconds. The sensor lock is then deactivated for a short period.

– Off
  The sensor lock is not active. All sensor buttons react to touch as normal.

Calibrate temperature

Using temperature calibration the temperature can be modified, in all modes and Gourmet Center (oven) and MasterChef (speed oven) programs, so that it is slightly higher or lower than shown.

The temperature calibration is represented by a bar with seven segments.

If all of the segments are filled the oven temperature is much higher than indicated in the display. If no segment is filled the oven temperature is much lower than indicated.

- Select + or —, to adjust the temperature calibration.
- Confirm with OK.

Voltage

Setting the voltage (electrical version)

- Select the desired voltage and corresponding frequency.
- Confirm with OK.

Showroom program

This function enables the oven to be demonstrated in showrooms without heating up. Do not activate this setting for domestic use.

Demo mode

If you have demo mode activated Demo Mode active. The appliance will not heat up will appear when you turn on the oven.

- On
  Touch *OK* for at least 4 seconds to activate demo mode.
- Off
  Touch *OK* for at least 4 seconds to deactivate demo mode. You can use the oven as normal.

Factory default settings

- Settings
  Any settings that have been altered will be reset to the factory default settings.
- Favorites
  All Favorites will be deleted.
- MW Power Levels
  Power levels which have been changed will be reset to the factory default settings.
- Recommended temperatures
  Any recommended temperatures that have been changed will be reset to the factory default settings.
- MyMiele
  All MyMiele entries will be deleted.

You can personalize your oven using the MyMiele function by inputting frequently used processes.

It is particularly useful with the MasterChef automatic program/ MasterChef Plus automatic program as you do not need to work through every screen in order to start a program.

You can also set processes that you have entered into MyMiele to appear in the Start screen (see “Settings – Start screen”).

To add an entry

You can add up to 20 entries.

- Select MyMiele .
- Select Add entry.

You can select subitems listed in the following categories:

– Operating Modes
– MasterChef Auto
– Special Modes
– Favorites

- Confirm with OK.

The selected subitem and its respective symbol appear in the list.

- Proceed as above for further entries as required. You can only chose subitems that have not already been selected.

Editing MyMiele

After selecting Edit you can

– add entries, if MyMiele contains less than 20 entries,
– delete entries,
– sort entries, if MyMiele contains more than 4 entries.

Deleting entries

- Select MyMiele .
- Select Edit.
- Select Delete entry.
- Select the entry that you want to delete.
- Confirm with *OK*.

The entry will then be removed from the list.

Sorting entries

If there are more than 4 entries, you can change the order of the entries.

- Select MyMiele .
- Select Edit.
- Select Sort entry.
- Select the entry.
- Select the position you want to move it to.
- Confirm with *OK*.

The entry will now appear in the position selected.

Using the “Timer” button, you can set a timer for a duration (e.g, for boiling eggs) or an alarm (e.g., for a specific time).

Two alarms can be set simultaneously, two timer durations or an alarm and a kitchen timer duration.

Using the alarm ⏰

The alarm can be used to set a specific time at which the buzzer will sound.

Setting the alarm

If the Time – Display – Off setting is selected, you will need to turn the oven on before setting the alarm. The alarm time will then appear in the display when the oven is turned off.

- Select the “Timer” sensor button.
- Select New Alarm.
- Set the time for the alarm.
- Confirm with OK.

When the oven is switched off, the alarm time and ⏰ will appear instead of the time of day.

If you are cooking at the same time or if you are in a different menu, the alarm time and ⏰ will appear in the top right of the display.

At the set alarm time:

– The ⏰ symbol flashes next to the time in the display.

– The buzzer will sound if it has been turned on (see “Settings – Volume – Buzzer tones”).

- Select the “Timer” sensor button or the alarm in the top right of the display.

The buzzer will stop and the symbols in the display will go out.

Changing an alarm

- Select the alarm in the top right of the display or select the “Timer” sensor button and the desired alarm.

The alarm selected appears.

- Set the new time for the alarm.
- Confirm with OK.

The adjusted alarm time is now saved and will appear in the display.

Deleting an alarm

- Select the alarm in the top right of the display or select the “Timer” sensor button and the desired alarm.

The alarm selected appears.

- Select Reset.
- Confirm with OK.

The alarm is deleted.

Using the Timer 🔔

The timer can be used to time any activity in the kitchen, e.g. boiling eggs.

The timer can also be used at the same time as a cooking program if a start and finish time have been set, e.g. a reminder to stir the dish or add seasoning.

A maximum timer duration of 9 hours, 59 minutes and 59 seconds can be set.

Setting the timer

If the Time – Display – Off setting is selected, you will need to turn the oven on before setting the timer. The timer can then be seen counting down in the display when the oven is turned off.

Example: You want to boil some eggs and set a timer of 6 minutes and 20 seconds.

- Select the “Timer” sensor button.
- Select New Timer Time.
- Set the required timer duration.
- Confirm with OK.

When the oven is turned off, the timer duration counts down in the display and 🔔 appears instead of the time of day.

If you are cooking at the same time or if you are in a different menu, the timer duration and 🔔 will appear in the top right of the display.

When the timer elapses:

– The 🔔 will flash.

– The time will count upwards.

– The buzzer will sound if it has been turned on (see “Settings – Volume – Buzzer tones”).

■ Select the “Timer” sensor button or the timer in the top right of the display.

The buzzer will stop and the symbols in the display will go out.

Changing the timer

■ Select the timer in the top right of the display, or select the “Timer” sensor button and then the desired timer.

The set timer duration appears.

■ Set a new timer duration.

■ Confirm with OK.

The modified timer duration is saved and will count down in seconds.

Deleting the timer

■ Select the timer in the top right of the display, or select the “Timer” sensor button and then the desired timer.

The set timer duration appears.

■ Select Reset.

■ Confirm with OK.

The timer is deleted.

Guide to the modes

The oven has a wide range of modes for preparing a variety of foods.

Due to country-specific preferences for preparation of food, default temperatures and temperature ranges in °F and °C do not correspond. The temperature values have been defined as given in the chart.

Solo Modes

Mode	Default temperature	Temperature range
Convection Bake Use this mode for baking and roasting on several levels at the same time. You can cook at lower temperatures than with the Surround mode because the fan distributes the heat evenly throughout the cavity for a consistent baking temperature.	350 °F (160 °C)	75–475 °F (30–250 °C)
Convection Roast This mode uses the convection fan to circulate heated air throughout the oven. Ideal for cooking delicate cuts of meat, fish and crispy poultry.	375 °F (160 °C)	75–475 °F (30–250 °C)
Auto Roast For a premium result, the meat is seared at a high temperature keeping meat tender and juicy.	350 °F (160 °C)	200–450 °F (100–230 °C)
Maxi Broil For broiling meats e.g. steak, chops, kebabs, etc. The entire Browning / Broiling element will glow red to produce the required heat.	Level 3	Levels 1–3
Convection Broil This mode distributes hot air from the Browning/ Broiling element over the food using the fan. This allows for a lower temperature to be used than when using Broil. Ideal for broiling thicker cuts of meat (e.g. chicken, roulades).	350 °F (200 °C)	200–500 °F (100–220 °C)

Mode	Default temperature	Temperature range
Intensive This mode gently circulates heated air from the lower heating element using the fan to create a brick oven environment. Ideal for baking pizza, focaccia, pies and tarts that require a crisp base and moist toppings.	350 °F (170 °C)	125–450 °F (50–220 °C)
Surround This premium baking mode uses heat from the upper and lower elements to create perfect results on all baking recipes.	350 °F (180 °C)	75–475 °F (30–250 °C)
Surround Roast For roasting traditional recipes, e.g. pot roast, and braising or cooking at low temperatures.	400 °F (180 °C)	75–475 °F (30–250 °C)
Bake This mode uses traditional baking techniques to perfect pies and biscuits.	350 °F (190 °C)	200–400 °F (100–200 °C)
Gentle Bake A combination of different heating elements ensures excellent baked good, gratins and lasagna.	350 °F (190 °C)	200–475 °F (100–230 °C)

Microwave (Solo)

Mode	Default power level	Power level range
Microwave This mode is used to rapidly defrost, reheat and cook food.	7	1–7

Combination Modes

During Combination modes the heating element and the magnetron turn on and off alternating one after the other. The heating element browns the food and the magnetron helps it cook quickly. The maximum power level is 3.

Mode	Default temperature	Temperature range
Combi Bake For rapid reheating and cooking of food, brown it at the same time. This combination program saves time and energy. When baking do not set the microwave power higher than Level 2.	325 °F (160 °C)	75–450 °F (30–220 °C)
Combi Auto Roast For roasting at high temperatures and slow cooking at low temperatures. The Microwaves will speed up your cooking process without sacrificing the quality of food. During the searing phase the oven heats up to 450°F (230°C) to seal the meat. Once this temperature has been reached, the oven temperature automatically drops back down to the pre-set cooking temperature for continued roasting. The maximum adjustable microwave power level is 3.	350 °F (160 °C)	200–475 °F (100–200 °C)

Mode	Default temperature	Temperature range
Micro Broil For broiling flat meats, e.g. steak, chops, kebabs, etc. The entire Browning / Broiling element will glow red to produce the required infrared heat. The Microwaves will speed up your cooking process without sacrificing the quality of food. The maximum settable microwave power level is 3.	Level 3	Levels 1–3
Combi Broil This mode distributes hot air from the Browning / Broiling element over the food using the fan. This allows for a lower temperature to be used then when using Micro Broil. Ideal for broiling thicker cuts of meat (e.g. chicken). The Microwaves will speed up your cooking process without sacrificing the quality of food. The maximum settable microwave power level is 3.	350 °F (200 °C)	200–400 °F (100–200 °C)

Microwave power

How it works

The Speed Oven contains a high-frequency tube called a magnetron. It converts electrical energy into microwaves. The microwaves are then distributed evenly throughout the metal sides of the oven interior to reach the food from all sides.

In order for microwaves to reach the food, they must be able to penetrate the cooking container being used. Microwaves can pass through porcelain, glass, cardboard, and plastics, but not metal. Therefore, do not use containers that are made of metal or contain metal (in the form of gold or silver trim, for example). The metal reflects microwaves and this could cause sparking. The microwaves cannot be absorbed.

The microwaves will pass through any suitable cookware and find their way directly into the food. All food contains moisture molecules which, when subjected to microwave energy, begin to oscillate at a rate of 2.5 billion times per second. The friction caused by these vibrations creates heat, which first starts developing around the outside of the food and then slowly penetrates it toward the center. The more water a food contains, the faster it is reheated or cooked. The heat is produced directly in the food.

Advantages

- Food can generally be cooked in a microwave with little or no liquid or oil.
- Defrosting, heating, and cooking is faster than when using a conventional cooktop or oven.
- Nutrients, such as vitamins and minerals, are generally retained.
- The natural color, texture, and taste of food are not impaired.

Microwaves stop being produced as soon as the cooking process is interrupted or the appliance door is opened. When the appliance is in operation, the closed, sealed door prevents microwaves escaping from the appliance.

Microwave power levels

Microwave power levels 1 to 7 can be selected.

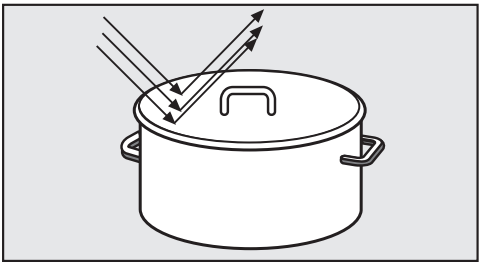

Microwaves are reflected by metal.

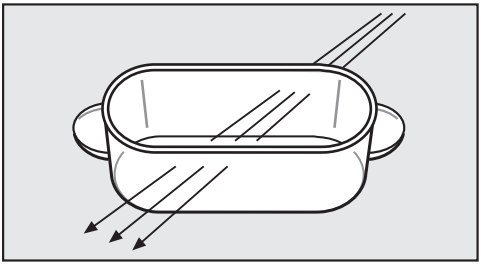

They pass through glass, porcelain, plastic and cardboard.

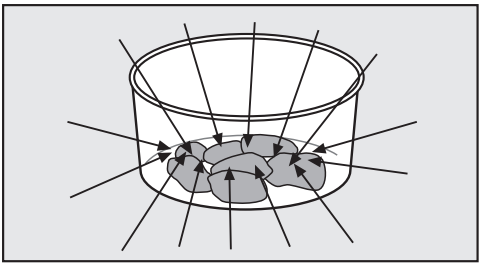

They are absorbed by food.

Non-microwave safe dishes can suffer damage or cause damage to the oven when using the the Microwave (Solo) ≋ and Combination modes with Microwave. Risk of Fire!

The material and shape of containers used affect cooking results and times. Circular and oval containers work best. The food will heat more evenly than in a square container.

Containers suitable for microwave use

Glassware

Heat-resistant glass or ceramic glass are ideal for use with microwave power.

Exception: Do not use crystal glass as it contains lead which can crack or shatter in a microwave.

Porcelain

Porcelain is a suitable material.

Exception: Do not use porcelain with gold, silver or cobalt blue edging or items with hollow knobs or handles, as insufficient ventilation may cause a build-up of pressure.

Earthenware

Decorated earthenware is only suitable if the decoration is beneath an all-over glaze.

Danger of burning! Wear pot holders when removing earthenware dishes from the Speed Oven.

Plastics

Plastic containers and plastic disposable containers may only be used with Microwave (Solo) ≋ if they have been declared as suitable for microwave use by the manufacturer. To protect the environment, it is best to avoid using single-use containers.

Do not leave the Speed Oven unattended when reheating or cooking food in disposable containers made of plastic, paper or other flammable materials.

Plastic cookware must be heat-resistant up to at least 230°F (110°C). Otherwise the cookware will deform and possibly come in contact with the food.
Only use plastic dishes in the Microwave ≋ and combination modes.

– Plastic microwave containers

Readily available from retail stores.

– Styrofoam containers

Disposable containers, such as trays made from styrofoam, can only be used for very short, timed warming and reheating of food.

– Plastic cooking bags

Plastic cooking bags can be used for cooking and reheating food.
They should be pierced beforehand so that steam can escape. This prevents a build-up of steam and reduces the rish of the bag bursting.

There are also cooking bags that do not need to be pierced. Following the instructions listed on the packaging.

– Roasting bags

Follow the manufacturer's instructions.

⚠ Fire hazard!
Do not use metal clips, plastic clips containing metal parts, or paper ties containing wire. There is a danger that they will ignite when heated.

– Melamine

Plastic tableware made from melamine is not suitable for use in this oven. Melamine absorbs microwave energy and becomes very hot. Before purchasing plasticware be sure that is is microwave-safe.

Unsuitable containers for microwave use

⚠ Dishes with hollow knobs or handles are not suitable for use with microwave modes. Moisture which has gathered in the hollow recesses can cause pressure to build up and the item can explode.

Metal

Metal reflects microwaves and obstructs the cooking process.

Do not use metal containers, aluminum foil, or metal cutlery and dishes with a metallic finish (gold rims or cobalt blue, for example) with Microwave combination programs.

Do not use containers where the foil lid has not been completely removed as small pieces of foil can cause sparking.

Exceptions:

The rack **supplied** is only suitable for cooking in Combination modes and modes that do not use microwave. It is **not suitable** for cooking in the Microwave (Solo) [≋] mode.
The rack should be used on a shelf level. Do not place it on the floor of the oven.

- Metal bakeware can be used with Microwave combination programs.
- Ready-meals in aluminum foil trays can be defrosted and reheated using microwave power as long as the lid is removed.

Using aluminum foil trays can cause crackling and sparking. Therefore, place aluminum foil trays on the glass tray and not on the wire rack.

Make sure that the aluminum tray is at least 3/4" (2 cm) from the oven walls at all times. It must not touch the walls.

However, as food is only heated from the top, it is better to remove the food from the aluminum foil container and transfer it to a dish suitable for use in a microwave oven. The heat distribution will be more even.

– Aluminum foil pieces

For even defrosting and to avoid overcooking unevenly shaped cuts of meat, poultry, or fish, small pieces of aluminum foil may be used to mask thin pieces for the last few minutes of the program.

Make sure that the aluminum foil is at least 3/4" (2 cm) from the oven walls at all times. It must not touch the walls.

– Metal meat skewers or clamps

These should only be used if they are very small in comparison to the size of the cut of meat.

Glazes and colors

Some glazes and colors contain metal and are therefore unsuitable for microwave modes.

Wood

Wooden dishes are not suitable. Moisture contained in the wood evaporates when exposed to microwave energy, causing the wood to dry and crack.

Testing dishes for their suitability

If in doubt as to whether glass, earthenware or porcelain plates or dishes are suitable for use with microwave energy, a simple test can be performed:

- Insert the glass tray on shelf level 1 and place the empty item you wish to test on the glass tray. Fill a suitable glass with water and also place this on the glass tray.
- Close the door.
- Select Microwave ≋.
- Set the highest microwave power level (7) and a cooking duration of 30 seconds.
- Confirm with OK and start the program.

If a cracking noise is heard accompanied by sparks during the test, turn the appliance off immediately. Any cookware which causes this reaction is unsuitable for use with microwave power. If in doubt, contact the cookware manufacturer.

This test cannot be used to check whether items with hollow knobs or handles are suitable for use with microwave power.

Placing the dish in the Speed Oven

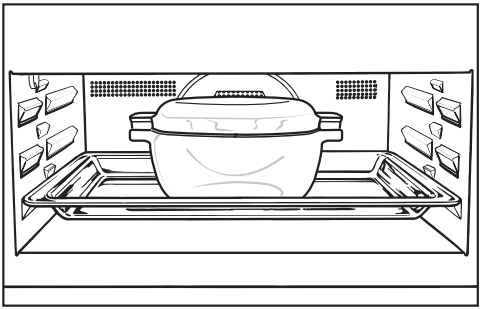

- Insert the glass tray on shelf level 1.
- The dish containing the food should always be placed in the middle of the glass tray.

Placing the food directly on the floor of the oven would give unsatisfactory and uneven results as the microwaves would not be able to reach the food from below.

Lid

The lid offers the following advantages:

– Prevents too much steam escaping, especially when cooking foods which need longer to cook, such as potatoes.

– Speeds up the cooking process.

– Prevents food from drying out.

– Helps keep the oven interior clean.

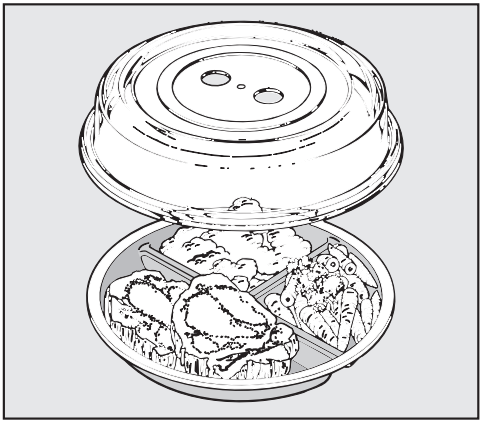

- When using Microwave (Solo) [≋], always cover the food with a lid or cover made of microwave-safe glass or plastic.

Suitable covers are available from retail outlets.

Alternatively, use plastic wrap recommended for use in a microwave oven (pierce as instructed by the manufacturer). Heat can cause normal plastic wrap to distort and fuse with the food.

⚠ The cover can withstand temperatures of up to 320°F (110°C). At higher temperatures (e.g., in Broil or Convection Bake mode) the plastic may distort and fuse with the food. Only use a cover in Microwave mode.

The cover should not form a seal with the container. If the cover is used with a container which only has a narrow diameter, there might not be enough room for condensation to escape through the holes in the side. The cover could get too hot and start to melt.

- When reheating food, **do not use** a cover for for:

– breaded food

– food which requires a crisp finish, e.g. toast

– food which you are reheating in a Combi mode

⚠ Otherwise pressure can build up, causing the container to explode and posing a severe risk of injury.

Do not cook or reheat food or liquids in sealed containers, jars, or bottles. Open containers beforehand and with baby bottles, the screw top and teat must be removed.

- Remove any accessories from the oven that you do not require for cooking.
- If possible, do not open the door during a program. If the door is opened during a program that is not using microwave power, the heat in the oven automatically turns off. The fan continues to run. As soon as the door is closed again, the program will continue.
- If a temperature range is given, it is best to select the lower temperature and check the food after the shortest cooking time given.
- Convection Broil can be used for a wide variety of foods. Lower temperatures can be used than with other Broil modes which use the maximum temperature setting.
- The factory default setting for the Time of Day display Time – Display – Off will consume the least amount of energy.
- With the factory default setting Lighting – On for 15 seconds the oven cavity lighting turns off automatically after 15 seconds. It can be turned on again at any time by selecting ☼.
- When cooking with safety shut-off or the roast probe, the oven cavity heating will turn off automatically shortly before the end of cooking. The residual heat utilization is sufficient to finish the cooking process. The residual heat in the oven is sufficient to complete the cooking process. Energy Save Phase is shown in the display. The cooling fan and hot air fan (if turned on) will continue to run.
- To save power, the oven turns off automatically if a button is not pressed after a certain amount of time or after a cooking program has ended. The time when this happens will depend on the selected settings (function, temperature, and duration).

Quick Guide

■ Turn the oven on.

The main menu will appear.

■ Place the food in the oven.

■ Select Operating Modes ▭.

■ Select the desired mode.

The oven mode and recommended temperature will appear.

The oven heating, lighting, and cooling fan will turn on.

■ Adjust the recommended temperature, if necessary.

Otherwise, the recommended temperature will be accepted within a few seconds. If necessary, select Change to go back to the temperature setting (see “Additional functions – Changing the temperature”).

■ Confirm with *OK*.

The required and the actual temperatures will appear.

You will see the temperature rising in the display. When the oven temperature is reached, the buzzer will sound if it has been turned on (see “Settings – Volume – Buzzer tone”).

After the cooking program:

■ Take the food out of the oven.

■ Turn the oven off.

Cooling fan

After the cooking process the cooling fan will continue to run for a while after a program is complete to prevent moisture from building up in the oven, on the control panel or surrounding cabinetry.

When the temperature in the oven has fallen sufficiently the cooling fan will turn off automatically.

The default setting can be changed if desired (see “Settings - Cooling Fan”).

Additional functions

You have placed the food in the oven, selected an operating mode, and set the temperature.

By selecting Additional Settings you can adjust cooking durations and make additional settings.

- Select Change.
- Select Additional Settings.

Additional menu options will appear. You can select or change these options for the cooking program:

- Duration
- Core temperature (This option only appears when you are using the roast probe. You cannot set a cooking duration when using the roast probe.)
- Ready at
- Start at (This option only appears after Duration or Ready at has been set.)
- Rapid PreHeat (This option only appears in the Convection Bake, AutoRoast, and Surround modes if you set a temperature above 210°F/100°C.)
- Crisp function (This moisture reduction feature will allow surfaces to crisp on the outside.)
- Change Operating Mode (You can change the oven mode during operation.)

Changing the temperature

As soon as a cooking mode is selected, the corresponding recommended temperature will appear in the display together with its possible range (see “Mode overview”).

- If the recommended temperature is suitable for your recipe, confirm with *OK*.
- If it is not suitable for your recipe, you can change it for this particular cooking program.

You can also permanently reset the recommended temperature to suit your personal cooking habits (See “Settings – Recommended temperatures”).

Example: You have selected Convection Bake and 350°F (170°C) and can see the temperature increasing.

You want to reduce the required temperature to 310°F (155°C).

- Select Change.
- Change the temperature.
- Confirm with *OK*.

The adjusted temperature is saved. The required and the actual temperatures will appear.

Rapid PreHeat

Rapid PreHeat can be used to speed up the preheating phase.

The Rapid PreHeat function turns on automatically if you set a temperature of more than 210°F (100°C) for Convection Bake, Auto Roast or Surround.

You can turn-off Rapid PreHeat for a relevant cooking process.

Rapid PreHeat

– On

The browning / broiling and convection heating elements turn on together with the fan to enable the oven to reach the required temperature as quickly as possible.

– Off

Only the heater elements associated with the cooking mode are turned on.

To turn off the Rapid PreHeat function:

- Select Change.
- Select Additional Settings.
- Select Rapid PreHeat.

Off will appear in the Rapid PreHeat field.

- Confirm with *OK*.

Rapid PreHeat has been deactivated.

Instead of Rapid PreHeat, Preheating will appear in the display.

- Select the required oven function and the temperature.
- Rapid PreHeat should be turned off when baking pizza or delicate mixtures.
- Wait for the preheating phase to complete.

When the set temperature is reached, the buzzer will sound if it has been turned on (see “Settings – Volume – Buzzer tone”).

- Place the food in the oven.

Using the Crisp function (moisture reduction)

It is a good idea to use this function when cooking items which are moist on the inside but which should be crispy on the outside, e.g., frozen french fries, croquettes, or breaded meats.

It is also suitable for fruit cakes, such as apple cake.

You have placed the food in the oven, selected an operating mode, and set the temperature.

> The “Crisp function” can be used with any oven function. However, it has to be activated separately for each cooking process. For best results, activate it at the beginning of the cooking process.

- Select Change.
- Select Additional Settings.
- Select Crisp function.

On will appear in the Crisp function field.

- Confirm with *OK*.

Moisture reduction is now activated.

Changing the operating mode

You can change the operating mode during operation.

- Select Change.
- Select Additional Settings.
- Select Change Operating Mode.
- Select the desired mode.

The new mode and the relevant recommended temperature will appear in the display.

- Change the temperature, if necessary.
- Confirm with *OK*.

The oven mode has been changed.

The times entered will be kept.

Setting additional durations

You have placed the food in the oven, selected an operating mode, and set the temperature.

By entering Duration, Ready at or Start at you can automatically turn the cooking program on or off.

– Duration
  Enter the cooking duration you require. The oven heating turns off automatically once the cooking duration has elapsed. The maximum duration that can be set is 12:00 hours.

  A cooking duration cannot be set if you are using the roast probe. When using the roast probe, the cooking duration is determined by when the set core temperature is reached.

– Ready at
  You can set the time at which the cooking program should end. The oven will turn off automatically at the time you have set.

  Ready at cannot be set if you are using the roast probe. When using the roast probe, the end of the cooking program is determined by when the set core temperature is reached.

– Start at
  You specify the time you want cooking to start. The oven will turn on automatically at the time you have set.

  Start at can only be used together with Duration or Ready at, except when using the roast probe.

Turning off automatically

Example: It is 11:45. Your food takes 30 minutes to cook and needs to be ready at 12:15 p.m.

Select Duration and set 0:30 h or select Ready at and set the time for 12:15 p.m.

The oven will turn off automatically after this duration has elapsed or when the time set is reached.

Setting the “Duration”

- Select Change.
- Select Additional Settings.
- Set the cooking duration.
- Confirm with *OK*.

Setting the “Ready at” time

- Select Change.
- Select Additional Settings.
- In the Ready at field, set the time at which the food should be ready.
- Confirm with *OK*.

Turning on and off automatically

We recommend having the oven turn on and turn off automatically when roasting. When baking, the oven should not be set to start a long time off. Otherwise the cake mixture or dough will dry out, and the raising agents will lose their effectiveness.

To turn a cooking program on and off automatically, you have a choice of how to enter the time parameters:

– Duration and Ready at

– Duration and Start at

– Ready at and Start at

Example: It is 11:30 a.m. Your food takes 30 minutes to cook and needs to be ready at 12:30 p.m.

■ Select Change.

■ Select Additional Settings.

■ In the Duration field, set 0:30 h.

■ In the Ready at field, set 12:30.

■ Confirm with *OK*.

Start at is calculated automatically. Start at 12:00 appears in the display.

The oven will turn on automatically at this time.

Sequence of a cooking program that turns on and off automatically

Up until the start time the mode, the selected temperature, Start at and the start time will appear in the display.

After the program has started you can follow the preheating phase on the display until the required temperature is reached.

Once this temperature is reached, the buzzer will sound if it has been turned on (see “Settings – Volume – Buzzer tone”).

After the preheating phase the remaining duration (time left) will appear in the display.

You can follow the duration counting down on the display. The last minute counts down in seconds.

At the end of the cooking process the buzzer will sound if it has been turned on (see “Settings – Volume – Buzzer tones”).

The oven heating and lighting will turn off. Program Finished appears.

You have the option to save the program as a Favorite (see “Favorites”) or to increase the cooking duration using Change.

During the cooling phase the cooling fan will continue to run.

Changing set durations

■ Select Change.

All options that can be changed will appear.

■ Change the desired time.

■ Confirm with *OK*.

These settings will be deleted in the event of a power failure.

Canceling cooking

■ Tap ⮌ twice.

Cancel Cooking? will appear in the display.

■ Select Yes.

The oven heating and lighting will turn off. Any cooking durations set will be deleted.

Quick Guide

■ Turn the oven on.

The main menu will appear.

■ Place the food in the oven.

■ Select Operating Modes ▭.

■ Select Microwave mode ≋.

The mode, recommended power level, and the duration field will appear in the display.

■ If necessary, change the recommended power level.

■ Set the cooking duration.

The maximum duration that can be set depends on the power level selected.

■ Select Start.

The cooking process starts. The magnetron, lighting, and cooling fan turn on.

The time left appears in the display. You can interrupt the cooking program at any time with Stop.

At the end of the cooking duration

– Program Finished appears in the display.

– The cooling fan continues to run.

– A buzzer will sound if turned on (see “Settings - Volume - Buzzer tones”).

You have the option to save the program as a Favorite (see “Favorites”) or to increase the cooking duration using Change. Select “Back” to go back to the main menu.

■ Take the food out of the oven.

■ Turn the oven off.

Cooling fan

After the cooking process the cooling fan will continue to run for a while after a program is complete to prevent moisture from building up in the oven, on the control panel or surrounding cabinetry.

The cooling fan will turn off after a set time.

Additional functions

You have placed the food in the oven, selected a microwave power level, and set the duration.

By selecting Additional Settings you can adjust cooking times and adjust additional settings.

- Select Change.
- Select Additional Settings.

Additional menu options will appear. You can select or change these options for the cooking program:

- Power Level
- Duration
- Ready at
- Start at
- Change operating mode ((You can change the oven mode during operation.)

Change the microwave power.

In the Microwave ≋ mode, default power level 7 is set at the factory.

- If the default power level is suitable for your recipe, confirm it with OK.
- If it is not suitable for your recipe, you can change it for this particular cooking procedure.

You can also permanently reset the default power level to suit your personal cooking practices (See “Settings - MW power levels”).

- Select Change.
- Change the power level and wait about 15 seconds.

The cooking procedure continues to run with the modified microwave power level.

Changing the cooking duration

- Select Change.
- Change the cooking duration.
- Select Start.

The program will restart using the new duration.

Changing the oven mode

You can change the oven mode during operation (see “Solo modes - Changing the oven mode”).

Setting additional cooking durations

You have placed the food in the oven, selected a microwave power level, and set the duration.

By entering Ready at or Start at you can automatically turn the cooking program on or off.

– Ready at

  You can set the time at which the cooking program should end. The oven will turn off automatically at the time you have set.

  Ready at cannot be set if you are using the roast probe. When using the roast probe, the end of the cooking program is determined by when the set core temperature is reached.

– Start at

  You can specify the time you want cooking to start. The oven will turn on automatically at the time you have set.

Turning on and off automatically

To turn a cooking program on and off automatically, you have a choice of how to enter the time parameters:

– Duration and Ready at

– Duration and Start at

Example: It is 11:45. Your food takes 5 minutes to cook and needs to be ready at 12:30.

■ In the Duration field, set 5:00 min.

■ Select Additional Settings.

■ In the Ready at field, set 12:30.

■ Confirm with *OK*.

Start at is calculated automatically. Start at 12:25 appears in the display.

The oven will turn on automatically at this time.

Sequence of a cooking program that turns on and off automatically

Up until the start time the mode, the microwave power level, the selected temperature, Start at and the start time will appear in the display.

After starting the time remaining will appear in the display.

You can follow the time counting down in the display.

At the end of the cooking procedure a buzzer will sound if turned on (see “Settings - Volume - Buzzer tones”).

The magnetron and the oven light turn off. Program Finished appears.

You have the option to save the program as a Favorite (see “Favorites”) or to increase the cooking duration using Change.

Changing set durations

- Select Change.
- Select Additional Settings, if required.

All options that can be changed will appear.

- Change the desired time.
- Select *OK* to confirm or select Start, if cooking is already in progress.

These settings will be deleted in the event of a power failure.

Deleting a finish time

- Select Change.
- Select Additional Settings.
- In the Ready at field, set the time to “- - -”.
- Select Start.

The finish time is deleted.

The program will start using the duration set.

Canceling cooking

- Tap “Back” twice.

Cancel Cooking?appears in the display.

- Select Yes.

The Main Menu will appear. Any cooking durations set will be deleted.

Microwave Combi modes use microwave power with another cooking mode (e.g. Convection Bake, Auto Roast). This combination enables shorter cooking durations.

Quick Guide

- Turn the oven on.

The main menu will appear.

- Put the food in the oven.
- Select Operating Modes ▭.
- Select the desired mode.

The mode, default power level, default temperature, and the cooking time field will appear in the display.

In the Combi modes, microwave power level 3 is the maximum power level that can be set.
The default temperature with the possible temperature range for each mode is described in “Guide to the modes.”

- Set the microwave power level, temperature, and cooking time.

You can set a maximum cooking time of 2:00 hours.

- Select Start.

The oven cooking will start. The oven heating, lighting and cooling fan will turn on.

The microwave power level, cooking time, set temperature, and actual temperature will appear in the display. You can follow the temperature rise in the display. When the set temperature has been reached, a signal will sound (see “Settings - Volume - Buzzer tone”).

The remaining time appears on the display.

The microwave will switch on once the target temperature is reached.

At the end of the cooking duration

- Program Finished appears in the display.
- The oven heating turns off automatically.
- The cooling fan continues to run.
- A buzzer will sound if turned on (see “Settings - Volume - Buzzer tones”).

You have the option to save the program as a Favorite (see “Favorites”) or to increase the cooking duration using Change.

■ Take the food out of the oven.

■ Turn the oven off.

Cooling fan

After the cooking process the cooling fan will continue to run for a while after a program is complete to prevent moisture from building up in the oven, on the control panel or surrounding cabinetry.

When the temperature in the oven has fallen sufficiently the cooling fan will turn off automatically.

The default setting can be changed if desired (see “Settings - Cooling Fan”).

Additional functions

You have placed the food in the oven, selected a temperature and microwave power level, and set the duration.

By selecting Additional Settings you can adjust cooking times and adjust additional settings.

■ Select Change.

■ Select Additional Settings.

Additional menu items will appear. You can select or change these options for the cooking program:

- Ready at
- Start at
- Duration MW

  (You can shorten the duration of the microwave cooking phase.)
- Change Operating Mode (You can change the oven mode during operation.)

Changing the microwave power level and temperature

- Select Change.
- Change the microwave power level or the temperature.
- Confirm with *OK*.

The adjusted value is now saved and will appear in the display.

Using the Crisp function (Moisture Reduction)

You can activate or deactivate the Crisp function (see “Solo modes - Using the Crisp function (Moisture reduction)”).

Changing the oven mode

You can change the oven mode during operation (see “Solo modes - Changing the oven mode”).

Setting additional durations

You can set a program to turn on and off automatically (see “Microwave (Solo) ≋ - Setting additional durations”).

Shortening the duration of the microwave phase

You can select how long you want microwave power to be on for during a microwave combination program. This can be useful e.g. when baking to help the dough rise more efficiently.

Select Duration MW to reduce the microwave cooking phase.

- Select Change.
- Select Additional Settings.
- Set the duration for the microwave cooking phase in Duration MW.
- Confirm with OK.

Your oven has a wide range of MasterChef programs that enable you to achieve excellent cooking results with ease. Simply select the appropriate program for the type of food you are cooking and follow the instructions in the display.

List of food types

You can select MasterChef under MasterChef Auto.

- Bakes & Gratins
- Baked Goods
- Meat
- Fish
- Poultry
- Cook Veg with MW
- Pizza
- Cook Soup with MW

Using the MasterChef programs

From the main menu:

■ Select MasterChef Auto.

A list of food types will appear in the display.

■ Select the food category.

The programs available for the food category selected will appear.

■ Select the desired program.

Each step you need to take before starting the program will appear in the display.

Depending on the program, the following information will appear in the display:

- Type of cookware
- Shelf level
- Use of the roast probe
- Cooking time

■ Follow the instructions in the display.

Notes on using these programs

- After cooking, allow the oven interior to cool down to room temperature again before starting a MasterChef or MasterChef Plus program.
- Some programs require a preheating phase before food can be placed in the oven. A prompt will appear indicating when to add the food.
- The duration quoted for MasterChef programs is an estimate. It may increase or decrease depending on the program. When using the roast probe, the duration will be determined by when the core temperature is reached. The duration, in particular with meat, will vary depending on the initial temperature of the food.

Search

You can search MasterChef by food type and by the name of the program.

There is a full text search which can also be used to search for parts of words.

From the main menu:

■ Select MasterChef Auto.

A list of food types will appear in the display.

■ Select Search.

■ Use the keyboard to type in the search text, e.g. “Rolls.”

The number of hits will be shown in the bottom right of the display.

If no match is found or if there are more than 40 matches, the hits field will be deactivated and you will need to change the search text.

■ Select hits.

The available food types and programs will appear.

■ Select the program or the food type and then the program.

The program starts.

■ Follow the instructions in the display.

Favorites

You can create and save up to 20 of your own programs.

– Each one can have up to 10 cooking stages. This enables you to save your most frequently used recipes very accurately. In each stage you can select settings such as mode, temperature and duration or core temperature.

– You can specify the shelf level(s) for the food.

– You can enter a program name for your recipe.

When you next select the program, it will start automatically.

There are different ways of creating a Favorite:

– At the end of running a MasterChef Program, save it as a separate program.

– After running a program with a set duration, select Save.

Then name the program.

Creating a Favorite

■ Select Favorites [ ].

■ Select Create Program.

You can now specify the settings for the first cooking stage.

Follow the instructions in the display:

■ Select and confirm the settings.

Depending on the mode selected you can add the Rapid PreHeat and Crisp function in Additional Settings.

The settings for the first cooking stage have now been set.

More cooking stages can be added, for example, if you would like to add another cooking mode to follow the first.

■ If additional cooking stages are required, select Add and proceed as you did for the first cooking stage.

■ When you have completed setting the cooking stages. select Finish.

Set the shelf level(s) to be used:

■ Select the desired level(s).

■ Confirm with *OK*.

A summary of your settings will appear in the display.

■ Check the settings and select *OK* to confirm, or select Change to correct the settings.

■ Select Save.

■ Enter the program name using the keyboard.

You can add a line break for longer program names using the ∫ symbol.

- Once you have entered the program name, select Save.

A message will appear on the display confirming that the name has been saved.

- Confirm with *OK*.

You can start the saved program immediately, delay the start, or change the cooking stages.

More information regarding Change Cooking Stages can be found in ”Changing Favorites”.

Starting a Favorite

- Place the food in the oven.
- Select Favorites [ ].

The program names will appear in the display.

- Select the desired program.

You can start the saved program immediately, delay the start, or show the cooking stages.

– Start Now
The program will start immediately. The oven heating will turn on immediately.

– Start Later
This option only appears when you are using the roast probe. You can set the time at which the cooking program should start. The oven will turn on automatically at the time you have set.

– Ready at
You can set the time at which the cooking program should end. The oven will turn off automatically at the time you have set.

– Start at
You can set the time at which the cooking program should start. The oven will turn on automatically at the time you have set.

– Display Cooking Stages
A summary of your settings will appear in the display. You can adjust the settings under Change (see “Changing Favorites”).

- Select the desired menu item.
- Confirm the message regarding which shelf level to use with *OK*.

The selected program will begin automatically right away or at the time set.

Changing Favorites

Changing cooking stages

Cooking stages in automatic programs that have been saved under a different name cannot be changed.

- Select Favorites [ ].

The program names will appear in the display.

- Select Edit.
- Select Change Program.
- Select the desired program.
- Select Change Cooking Stages.

The setting specified for a cooking stage can be changed or more cooking stages can be added to the program.

- Change the program as desired (see “Creating a Favorite”).
- Check the settings and confirm with *OK*.
- Select Save.

The changes made to the program will be saved.

Changing the name

- Select Favorites [i].

The program names will appear in the display.

- Select Edit.
- Select Change Program.
- Select the desired program.
- Select Change name.
- Change the name (see “Creating a Favorite”) and select Save.

A message will appear in the display confirming that the name has been saved.

- Confirm with *OK*.

The new program name will be saved.

Deleting a Favorite

- Select Favorites [i].

The program names will appear in the display.

- Select Edit.
- Select Delete Program.
- Select the desired program.
- Confirm with *OK*.

The program is deleted.

You can delete all of your Favorites at the same time (see “Settings – Factory Default – Favorites”).

With the “Minute +” function the microwave starts with a set microwave power level and cooking duration, e.g., for heating liquids.

The maximum default power level of 7 and a cooking duration of 1 minute are preset.

Tip: You can alter the microwave power level and the duration. The maximum duration will depend on the microwave power level selected (see “Settings – Quick MW”).

This function can only be used when no other cooking programs are in use.

- Select “Minute +”, and the cooking procedure will start.
  Tapping the button repeatedly will increase the cooking time.

The time remaining appears in the display.

You can stop the cooking procedure at any time with Stop and cancel with “Back.”

At the end of the program

– Program Finished appears in the display.

– A buzzer will sound if turned on (see “Settings - Volume - Buzzer tones”).

Popcorn

With the “Popcorn” button, the microwave starts with a set power level and cooking time.

Microwave power level 6 and a cooking time of 3 minutes are preset. This is suitable for most brands of microwave popcorn.

Tip: The duration can be changed up to a maximum of 4 minutes. The microwave power level cannot be changed (see “Settings – Popcorn”).

This function can only be used when no other cooking programs are in use.

■ Tap “Popcorn” to start the program.

The time remaining appears in the display.

You can stop the cooking procedure at any time with Stop and cancel with “Back.”

Do not leave the oven unattended during this program and follow the manufacturers instructions.

At the end of the program

– Program Finished appears in the display.

– A buzzer will sound if turned on (see “Settings - Volume - Buzzer tones”).

Eating food which has been cooked correctly is important for good health.
Only bake cakes, pizza, french fries, etc. until they are golden brown. Do not overcook them.

Oven modes

Depending on how you would like the food prepared, you can use Convection Bake, Surround, Intensive, or Combi Bake (see “Guide to the modes”).

Combi Bake is particularly suitable for baking dough with a longer baking time, such as yeast-based dough, enriched dough, and kneaded dough, because the cooking time is shortened.

During this mode, power level 2 must not be exceed throughout the entire baking time.

Bakeware

The bakeware used depends on the oven mode chosen and how the food is being prepared.

– Convection Bake, Intensive:
  Bakeware made of any heat-resistant material is suitable. Light-colored, thin, non-reflective metal bakeware can be used, but results may not be as good as with dark, non-reflective bakeware.

– Surround:
  Dark metal, enamel, or aluminum bakeware with a matte finish, as well as heat-resistant glass, ceramic, and coated bakeware can be used.
  Avoid using bright, shiny metal bakeware; it gives an uneven and poor browning result and in some cases cakes might not cook properly.

– Combi Bake
  Only use oven-safe bakeware suitable for microwave use (see “Dishes suitable for microwave use”), such as oven-safe glass or ceramic dishes, as these allow microwaves through them.
  Metal containers reflect microwaves so food will only cook from above. Cooking durations would, therefore, be longer and metal tins could also cause sparking. Place the dish on the glass tray so that it cannot touch the oven walls. If the dish being used causes sparking, do not use it for combination cooking modes again.

Parchment paper

Place french fries, croquettes and similar types of food on paper.

Temperature

Select the suggested temperature if possible.

Choosing a baking temperature higher than those recommended may reduce the cooking time, but will lead to uneven browning, and unsatisfactory cooking results.

Baking duration

Check if the food is cooked at the end of the shortest duration quoted. To check if a cake is ready insert a wooden skewer or toothpick into the center, it should come out clean.

Shelf levels

The shelf level that you place the food on for baking depends on the oven mode and the number of trays being used.

- **Convection Bake**
  Cakes in pans: Level 1 from the bottom
  Flat baked goods (e.g. cookies, cakes): Level 2 from the bottom
  Baking on 2 levels at the same time: Levels 1+3 from the bottom or levels 2+3 from the bottom
- **Surround**
  Cakes in pans: Level 1 from the bottom
  Flat baked goods (e.g. cookies, cakes: Level 2 from the bottom
- **Intensive**
  In general use Level 1 from the bottom.
- **Combi Bake**
  Insert the glass tray on Level 1 from the bottom and place the bakeware on it.

Tips

- Setting the cooking duration. When baking, the oven should not be set to start after an extended period of time. Otherwise the cake mixture or dough will dry out, and the raising agents will lose their effectiveness.
- Place cakes in rectangular bakeware on the rack with the longer side across the width of the oven for optimum heat distribution and even results.

Always observe the USDA guidelines for food safety.

Oven modes

Convection Bake / Convection Roast , Auto Roast

For roasting meat, fish and poultry dishes in which a browned finish is desired.

Combi Bake ,
Combi Auto Roast

The program duration is shorter with these modes.

Set the microwave to the following power levels for the entire roasting time:

– For meat and fish: max. Level 3

– For poultry: max. Level 2

This combination program is **not** suitable for cooking roast beef or tenderloins. The center would be too well cooked before the exterior is browned.

Cooking accessories

Please take into account the material of your bakeware in your choice of oven mode:

– Convection Bake / Convection Roast / Auto Roast :
Roasting pans, ovenproof ceramic dishes, and clay roasting pans.

Make sure that the pot and lid have heat-resistant handles.

– Combi Bake / Combi Auto Roast :
Dishes must be suitable for use in a microwave oven and must not have metal lids (see “Containers suitable for microwave use”).

Roasting in a closed pan

- Season the meat and place it in the roasting dish. Dot with butter or margarine or brush with oil if necessary. For large lean cuts of meat (4–6 lbs.) and fatty poultry, add about 1/2 cup of water to the dish.
- When using a roasting bag, follow the manufacturer's instructions.

Roasting on the rack

Add a little fat or oil to very lean meat or wrap with bacon.

Do not add too much liquid during cooking as this will hinder the browning process.

Temperature

Select the suggested temperature if possible.

If higher temperatures are used, the meat will brown on the outside, but will not be properly cooked through.

Shelf levels

- Convection Bake / Convection Roast / Auto Roast:
  Rack with meat on it on shelf level 1
- Combi Bake / Combi Auto Roast:
  Rack or glass tray with meat on it on shelf level 1

Tips

- Resting time: At the end of the program, take the roast out of the oven, cover with aluminum foil and let stand for about 10 minutes. This helps retain the juices when the meat is sliced.
- The larger the cut of meat, the lower the temperature setting should be.
- Use a roast probe for accurate cooking temperatures and best results.

Roast Probe

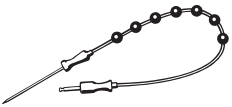

The roast probe enables the roasting process to be monitored simply and reliably.

How the roast probe works

The metal tip of the roast probe is inserted into the food. There is a temperature sensor in the metal tip which measures the core temperature of the food during cooking. The rise in the core temperature reflects the extent to which the food is cooked. You can program the core temperature to be lower or higher, depending on how you would like the meat cooked, rare, medium or well-done.

A core temperature of up to 210°F (99°C) can be set. Please refer to the roasting chart and “Slow cooking” for the core temperatures applicable for different types of meat.

The cooking time will be similar when cooking with or without the roast probe.

When to use the roast probe

Some MasterChef programs and Special modes will prompt you to use the roast probe.

You can also use it with your own Favorite programs and with the following functions:

- Auto Roast
- Convection Bake / Convection Roast
- Surround / Surround Roast
- Convection Broil
- Microwave
- Combi Auto Roast
- Combi Bake
- Combi Broil

Important notes regarding the roast probe

Please note:

- You can place the meat in a pot, on the rack or in the glass tray, depending on the mode selected.
- The metal tip of the roast probe must be fully inserted into the center of the food.
- When cooking poultry, insert the metal tip into the thickest part of the breast. You can find the thickest part of the breast by pressing the area with your thumb and index finger.
- Do not let the metal tip touch any bones or insert it into a fatty area of the meat. If fat or bone come into contact with the probe, this can lead to the oven being turned off too early.
- If the meat is very heavily marbled with fat, select the highest core temperature given in the roasting chart.
- When using roasting bags or aluminum foil, insert the probe through the bag or foil into the center of the meat. You can also place the meat, with the roast probe inserted, inside the foil. Follow the roasting bag / aluminum foil manufacturer's instructions.

Using the roast probe

- Insert the metal tip of the roast probe fully into the food.
- Place the food in the oven.

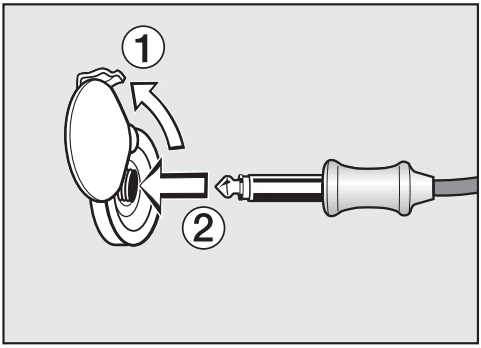

- Insert the plug of the roast probe into the socket until you feel it engage.
- Close the door.
- Select an oven mode or MasterChef program.
- Set the temperature or power level if necessary.
- Set the core temperature if necessary.

The core temperatures cannot be changed for the MasterChef programs.

You can also delay the start of the cooking program to a later time. To do this, select the Start at option from the menu. In automatic programs, select Start Later.

You can estimate approximately when the food will be ready as the duration of the cooking program is about the same as if you were cooking food without using the roast probe.

Duration and Ready at cannot be set because the total time depends on how long it takes for the core temperature to be reached.

Time-left display

If the temperature set for a cooking process is above 285°F (140°C), the estimated duration remaining (time left) will appear in the display.

The time left is calculated from the cooking temperature selected, the set core temperature, and the progress of the core temperature as it rises.

The time left first shown is an estimate. As the cooking process continues, the time left is revised continuously, and a more accurate figure is shown.

The time left will be deleted if the cooking or core temperature is changed or if a different mode is selected. If the door is opened for a longer time, the time left will be recalculated.

Displaying the core temperature

As soon as the time left appears, you can also display the actual core temperature.

- Select Change.
- Select Display core temperature.
- Select On.
- Confirm with *OK*.

The actual core temperature will also appear in the display.

Residual heat utilization

The oven heating turns off shortly before the end of the cooking process. The residual heat in the oven is sufficient to complete the cooking process.

Using the residual heat in the oven saves energy.

Energy Save Phase will appear in the display to show that the oven is in energy save mode. The measured core temperature is no longer visible.

The cooling fan and convection fan (if turned on) will continue to run.

When the selected core temperature has been reached:

– Program Finished appears.

– The buzzer will sound if it has been turned on (see “Settings – Volume – Buzzer tones”).

Tip: If the food is not sufficiently cooked, insert the roast probe in a different place and repeat the program.

Slow Roasting

This cooking method is ideal for cooking beef, pork, veal or lamb when a tender result is desired.

First, using a cooktop sear the meat on all sides to seal in the juices.

Then place the meat in a preheated oven. It will be cooked at a low temperature for an extended time allowing the meat to become very tender.

The meat will rest and the juices start to circulate evenly throughout.
This gives the meat a very tender and juicy result.

Tips

- Use fresh, lean meat that has been trimmed. Remove the bones before cooking.
- When searing, use a suitable cooking oil or fat that can withstand high temperatures (e.g. clarified butter, vegetable oil).
- Do not cover the meat during cooking.

Cooking will take approx. 2-4 hours, depending on the size and weight of the meat, as well as the desired degree of doneness and browning.

Cooking time / Core temperatures

Always observe USDA food safety guidelines.

Meat	[min]	°F / °C
Beef Tenderloin	80–100	138/59
Sirloin		
– rare	50–70	118/48
– medium	100–130	135/57
– well done	160–190	156/69
Pork tenderloin	80–100	145/63
Smoked pork chop *	140–170	154/68
Filet of veal	80–100	140/60
Veal loin *	100–130	145/63
Saddle of lamb *	50–80	140/60

* boneless

After cooking:

Because the cooking temperatures are very low:

- The meat can be carved immediately. No resting time is required.
- The cooking result will not be affected if the meat is left in the oven after the program is complete. It can be kept warm until you serve it.
- The meat is at an ideal temperature to be eaten right away. Serve on pre-warmed plates with a hot sauce or gravy to keep warm.

Using “Slow Roasting” special mode

Use the glass tray with the wire oven rack placed on top of it.

- Select Special Modes ✡.
- Select Slow Roasting.
- Set the temperature.
- Set the core temperature.
- Follow the instructions in the display. Let the wire oven rack with glass tray preheat in the oven.
- While the oven is preheating, sear the meat on all sides on the cooktop.

⚠ Danger of burning!
When the oven is hot use pot holders to insert, remove, or turn food, as well as when adjusting the oven shelves, etc.

- Once Use the roast probe appears in the display, place the seared meat on the rack and insert the roast probe so that the metal tip is fully in the center of the meat.

For more information, see “Roast - Roast probe”.

⚠ Danger of burning!
The broiling element is hot.

- Insert the plug of the roast probe into the socket until you feel it engage.
- Close the door.

When the program is completed Program Finished will appear in the display and the buzzer will sound if it has been turned on (see “Settings – Volume – Buzzer tone”).

If the meat is not cooked to your satisfaction, you can extend the cooking time.

Adjusting the Slow Roasting temperature manually

Use the glass tray with the wire oven rack placed on top of it.
Do not use the Rapid PreHeat function to preheat the oven.

- Place the glass tray with a rack on shelf level 1.
- Select Operating Modes ▭.
- Select Surround mode ☰ and a temperature of 265°F/130°C.
- Turn off the Rapid PreHeat function by selecting Change – Additional Settings – Rapid PreHeat – Off.
- Preheat the oven with the glass tray and the rack inside for approx. 15 minutes.
- While the oven is preheating, sear the meat on all sides on the cooktop.

⚠ Danger of burning!
When the oven is hot use pot holders to insert, remove, or turn food, as well as when adjusting the oven shelves, etc.

- Place the seared meat on the wire oven rack.
- Select Change.
- Reduce the temperature to 210°F/100°C.
- Continue cooking until the end of the cooking time.

You can set the cooking process to finish automatically (see “Modes without microwave power – Setting the duration”).

⚠ Danger of burns!
Broil with the oven door closed. If you broil with the door open the hot air will escape from the oven before it has been cooled by the cooling fan.
The controls will get hot.

Oven modes

Maxi Broil

For broiling thin cuts of meat and browning.

The entire Browning / Broiling element will get hot and glow red.

Convection Broil

For broiling thicker items, e.g. poultry or London broil.

The Browning/Broiling element and the fan switch on in alternating phases.

Micro Broil / Combi Broil

The broiling duration is shorter.

The maximum settable microwave power level is 3.

Cooking accessories

- Broiling on the wire oven rack.
- Brush the rack with oil, and place the food on it. It is best to broil food of a similar thickness at the same time so that the broiling duration for each item does not vary too greatly.

Broil level (Maxi Broil / Micro Broil)

– Level 3: Thin cuts are cooked quickly when placed close to the Browning / Broiling element
– Level 2: For lighter browning, e.g. casseroles.
– Level 1: Thicker cuts should be broiled further from the Browning / Broiling element.

Temperature (Convection Broil, Combi Broil)

As a general rule, select the default temperature. If higher temperatures are used, the meat will brown on the outside but will not be properly cooked through.Thin cuts can generally be broiled at 425°F (220°C), thicker cuts at 355-400°F (180-200°C).

Preheating

Always preheat the oven for about 5 minutes with the door closed before Broiling.

Do not set a microwave power level during pre-heating.

Shelf levels

– Maxi Broil, Micro Broil:
  Use shelf level 2 or 3 depending on the thickness of the food.

– Convection Broil, Combi Broil:
  Use self level 1 or 2 depending on the thickness of the food.

Broiling duration

– Flat pieces of fish and meat usually take 6–8 minutes per side.
  It is best to broil food of a similar thickness at the same time so that the broiling duration for each item does not vary too greatly.

– Thicker pieces need about 7–9 minutes.

– Roulades: allow approx.10 minutes per cm diameter.

Testing doneness

Always observe USDA food safety guidelines.

Preparing food for broiling

Rinse the meat under cold water and pat dry. Do not season the meat with salt before broiling, this will draw out the juices.

Brush the meat with oil, if necessary. Do not use other types of fat as they can easily burn and cause smoke.

Clean fish as usual. To enhance the flavor, salt or lemon can be added.

Broil

■ Preheat the Browning/Broiling element for approx. 5 minutes with the door closed.

Do not set a microwave power level during pre-heating.

■ Place the food on the wire rack.

■ Select a mode, microwave power level and a broil setting for the Maxi Broil and Micro Broil modes.

■ Select a mode, microwave power level and a temperature for the Convection Broil and Combi Broil modes.

⚠ Danger of burns!
When the oven is hot use pot holders to insert, remove or turn the food, or when adjusting the oven shelves, etc.

■ Place the food on the appropriate shelf level (see the broiling chart).

■ Close the door.

Always observe the USDA guidelines for food safety.

	Oven mode	≋ / 🌡	Suitable for:
Defrost	≋	1	Very delicate foods such as cream, butter, filled sponge cakes, cheese
		1	All other types of food
Reheat	≋	4	Food for infants and children
		5	All types of food; frozen meals that do not need browning
		6	
		7	Drinks
Cooking	≋	6 Heating-up	Casseroles, puddings, frozen foods that do not need browning
		4 Continued cooking	
		2 Simmering	
	Select a “Microwave Combi” mode if you want to shorten cooking durations and have a crisp finish to the dish.		
	≋	3 + 320-355°F (160–180 °C)	Sear using a high temperature to start with, then continue cooking with a lower temperature.
	≋	3 + 300-340°F (150–170 °C)	Ready-meals which need to be browned, e.g., gratins

≋ Microwave / Microwave power level / ≋ Combi Auto Roast / ≋ Combi Bake / 🌡 Temperature

The duration required depends largely on the nature of the food, the amount and its initial temperature. Food that has been refrigerated, for example, takes longer to reheat than food at room temperature. Please refer to the relevant charts.

Before defrosting, reheating and cooking

- Place food (frozen or unfrozen) in a dish that is suitable for microwave use, and cover it.
- Place the dish in the middle of the glass tray on shelf level 1.

The roast probe can be used to monitor the temperature when reheating or cooking (see “Roast - Roast probe”).

With Microwave Combi modes

- Use only microwave-safe and heat-resistant cookware.

A lid is not usually required.

Never use a lid with the Combi Auto Roast and Micro Broil modes as the food will not brown.

- Place the glass tray on shelf level 2.

Place pre-made meals in aluminum containers directly on the glass tray.

During the defrosting, reheating and cooking process

- Turn or stir the food several times. Stir the food from the outside towards the middle, as food heats more quickly from the outside.

After defrosting, reheating and cooking

Compensating times are resting periods in which the temperature is uniformly distributed in the food.

- Allow the food to stand at room temperature for a few minutes to enable the heat to spread evenly throughout the food.

⚠ Burn hazard!
After reheating food, especially food for babies and small children, stir the food or shake the container and check that the temperature does not pose any danger. Double check after it has been left to stand.

⚠ Danger of burns!
Be careful when removing dishes from the appliance. Although heat is not normally produced in the container itself by the microwaves (apart from stoneware), heat transfer from the food to the container may be considerable, making the container itself hot.
Use pot holders when removing dishes.

- Always ensure that food is sufficiently cooked or reheated.
- If you are unsure whether a sufficiently high temperature has been reached or whether the food is sufficiently cooked, continue reheating a little longer.
- Always follow proper food safety guidelines.

Tips on reheating

⚠ Danger of burns! Food for infants and children must not be too hot.
Heat baby food for only approx. 30-60 seconds at power level 4. You can also use the roast probe for temperature-controlled heating.

Otherwise pressure can build up, causing the container to explode, posing a severe risk of injury.
Do not cook or reheat food or liquids in sealed containers, jars or bottles. Otherwise pressure will build up which can cause the bottle or container to explode. Risk of injury.

Eggs may burst.
Never reheat hard boiled eggs using Microwave [≋], even without the shell. The eggs can explode.

When boiling and in particular when reheating liquids using microwave power, the boiling point of the liquid may be reached without the production of typical bubbles. The liquid does not boil evenly throughout.

This so-called “boiling delay” can cause a sudden build up of bubbles when the container is removed from the oven or shaken. This can lead to the liquid boiling over suddenly and explosively. The formation of bubbles can be so strong that the pressure forces the oven door open.

To avoid this, always wait a minimum of 20 seconds before removing the container from the oven and place a suitable glass rod or utensil into the cup or glass when heating liquids.

Cooking tips

Food with a thick skin or peel, such as tomatoes, sausage, potatoes, and egg plant, can burst when heated.

Pierce or score the skin of these foods several times to allow steam to escape.

Eggs heated in their shell can burst, even after they have been removed from the oven.

Eggs can only be cooked in their shells using Microwave (Solo) ≋ in a specially designed egg-boiling device available from speciality stores.

When heating shelled eggs, the yolk may still burst after cooking.

Prick the yolk several times before cooking to avoid this.

When to use	Notes
Defrosting large quantities of food at once, e.g. 4 lbs. of fish	The glass tray can be used on shelf level 1 for defrosting food.
Reheating food	Always cover food when reheating it, except when reheating fried food or food with breading.
Cooking vegetables	Add a little water to vegetables which have been kept stored. Vegetable cooking times depend on the texture of the vegetable. Fresh vegetables contain more water than vegetables which have been stored and usually cook more quickly.
Cooking frozen meals	Deep frozen meals can be defrosted and then reheated or cooked in one process. Follow the instructions on the package.

Tables for defrosting, reheating and cooking food using the Microwave ≋ mode

The following notes apply to all tables:

Always observe the USDA guidelines for food safety.

- Take note of the default microwave power levels, durations and standing times. These take the consistency, the quantity and the initial temperature of the food into account.
- In general you are recommended to select the middle duration.
- Place the food on the glass tray and use shelf level 1.

Table for defrosting food

	Quantity	≋	◷ [min]	⌛ [min] [1)]
Dairy products				
Cream	1 cup (250 ml)	1	13–17	10–15
Butter	1/2 lb (250 g)	1	8–10	5–10
Cheese slices	1/2 lb (250 g)	1	6–8	10–15
Milk	2 cups (500 ml)	2	14–16	10–15
Baked Goods				
Pound Cake (1 slice)	approx. 1/4 lb	2	1–2	5–10
Pound Cake	approx. 3/4 lb	2	4–6	5–10
Fruit Cake (3 slices)	approx. 3/4 lb	2	6–8	10–15
Butter Cake (3 slices)	approx. 3/4 lb	2	5–7	5–10
Cream Cake (1 slice)	approx. 1/4 lb	1	1:30	5–10
Cream Cake (3 slices)	approx. 3/4 lb	1	4–4:30	5–10
Yeast rolls, puff pastries (4 pieces)		2	6–8	5–10
Fruit				
Strawberries, raspberries	1/2 lb (250 g)	2	7–8	5–10
Currants	1/2 lb (250 g)	2	8–9	5–10
Plums	1 lb (500 g)	2	12–16	5–10
Meat				
Ground Meat	1 lb (500 g)	2	16–18	5–10
Chicken	2 lbs	2	34–36	5–10
Vegetables				
Peas	1/2 lb (250 g)	2	8–12	5–10
Asparagus	1/2 lb (250 g)	2	8–12	10–15
Beans	1 lb (500 g)	2	13–18	10–15
Red cabbage	1 lb (500 g)	2	15–20	10–15
Spinach	3/4 lb (300 g)	2	12–14	10–15

≋ Microwave Power Level / ◷ Defrosting / ⌛ Resting Time

[1)] Allow food to stand at room temperature. During this resting time, the temperature will distribute throughout the food more evenly.

Table for reheating food

	Quantity	≋	⏲ [min:sec]	⌛ [min] [1]
Drinks [2]				
Coffee, drink temperature 140-150°F / 60–65°C	1 drink (2/3 cup / 200 ml)	7	0:50–1:10	–
Milk, drink temperature 140-150°F / 60–65°C	1 drink (2/3 cup / 200 ml)	7	1:00–1:50 [3]	–
Boiling water	1 drink (1/2 cup / 125 ml)	7	1:00–1:50	–
Baby bottle (milk)	Approx. 2/3 cup / 200 ml	4	0:50–1:00 [3]	1
Mulled wine, drink temperature 140-150°F / 60–65°C	1 glass (2/3 cup / 200 ml)	7	0:50–1:10	–
Food [3]				
Baby Food (room temperature)	1 jar (7 oz / 200 g)	4	0:30–1:00	1
Cutlets, fried	7 oz / 200 g	5	3:00–5:00	2
Fish fillet, fried	7 oz / 200 g	5	3:00–4:00	2
Roast meat in gravy	7 oz / 200 g	5	3:00–5:00	1
Side dishes	8 oz / 250 g	5	3:00–5:00	1
Vegetables	8 oz / 250 g	5	4:00–5:00	1
Gravy	1 cup / 250 ml	5	4:00–5:00	1
Soup / Casserole	1 cup / 250 ml	5	4:00–5:00	1
Soup / Casserole	1 pt / 500 ml	5	7:00–8:00	1

≋ Microwave power level / ⏲ heating-up time / ⌛ resting time

[1] Allow food to stand at room temperature. During this resting time, the temperature will distribute throughout the food more evenly.

[2] To avoid a boiling delay, always wait a minimum of 20 seconds before removing the container from the oven and place a suitable glass rod or utensil into the cup or glass when heating liquids.

[3] Durations apply for food with an initial temperature of approx. 40°F / 5°C.
For food which is not normally stored in the fridge an initial temperature of approx. 70°F / 20°C is assumed.
With the exception of baby food and delicate sauces, food should be heated to a temperature of 155-165°F / 70–75°C.

Table for cooking food

	Quantity	Level 6 ◷ [min]	+	Level 4 ◷ [min]	⌛ [min] [1)]
Meat					
Meatballs in sauce (3/4 lb/400 g meat)		10–12		–	2–3
Stew (1.5 lbs/750g meat)		16	+	15	2–3
Poultry					
Chicken in sauce	approx. 1 3/4 lb (800 g)	4	+	12	2–3
Chicken Curry	approx. 2 lbs (900 g)	5	+	12	2–3
Chicken Risotto	approx. 3 1/2 lbs (1.6 kg)	10	+	15	3–5
Fish					
Fillet in sauce	approx. 2 lbs (900 g)	8–10		–	2–3
Fish Curry	approx. 3 1/4 lbs (1.5 kg)	5	+	12	3–5
Fresh vegetables					
Carrots	3/4 lb (300 g)	2	+	6	2
Cauliflower florets	1 lb (500 g)	6	+	10	2
Peas	approx. 1 lb (450 g)	5	+	10	2
Peppers, cut into strips	1 lb (500 g)	5	+	10	2
Kohlrabi, batons	1 lb (500 g)	3	+	8	2
Brussels Sprouts	3/4 lb (300 g)	3	+	9	2
Asparagus	1 lb (500 g)	5	+	8	2
Broccoli, florets	3/4 lb (300 g)	4	+	4	2
Leeks	1 lb (500 g)	5	+	8	2
Green Beans	1 lb (500 g)	4	+	12	2
Frozen Vegetables					
Peas, Mixed Vegetables	approx. 1 lb (450 g)	5	+	11	2
Spinach	approx. 1 lb (450 g)	5	+	7	2
Brussels Sprouts	3/4 lb (300 g)	4	+	6	2
Broccoli	3/4 lb (300 g)	3	+	6	2
Leeks	approx. 1 lb (450 g)	4	+	8	2
Desserts					
Fruit Compote (2 cups/500 ml fruit juice or 1 lb/500 g fruit)		6–8		–	–

◷ Cooking / ⌛ Resting Time

[1)] Allow food to stand at room temperature. During this resting time, the temperature will distribute throughout the food more evenly.

In addition to the automatic programs your oven has a variety of special modes.

■ Select Special Modes ✿.

The following special modes are available:

– Defrost
– Dehydrate
– Reheat
  (to reheat plated meals)
– Warm-up Cookware
– Proof dough
– Slow Roasting
  See “Slow Roasting” for more information.
– Pizza
– Sabbath Program

This section also gives information on the following applications:

– Gentle Bake
– Canning
– Frozen food

Defrost

Use the “Defrost” mode to gently defrost frozen food.

Only use heat-resistant containers that are microwave safe.

■ Select Special Modes ✿.

■ Select Defrost.

■ Select the desired food category.

■ Enter the weight of the food.

■ Follow the instructions in the display.

Air is circulated throughout the cavity to gently defrost the food.

⚠ Danger of salmonella poisoning!
Observe proper hygiene rules when defrosting poultry.
Do not use the defrosting liquid.

Tips

– Remove the packaging and place the food to be defrosted on the glass tray.
– When defrosting poultry, put it on the rack over the glass tray to catch the defrosting liquid so that the meat is not lying in this liquid.

Dehydrate

This program is designed for traditional drying of food to preserve it.

The temperature can be set between 175-250°F (80-100°C).

It is important that fruit and vegetables are ripe and not bruised before they are dehydrated.

■ Prepare the food for dehydrating.

– Peel and core apples, and cut into slices 1/4" (0.5 cm) thick.

– Core plums if necessary.

– Peel, core and cut pears into wedges.

– Peel and slice bananas.

– Clean mushrooms, then either halve or slice them.

– Remove parsley and dill from the stem.

■ Distribute the food to be dried evenly over the glass tray or the rack.

■ Select Special Modes ✡.

■ Select Dehydrate.

■ If necessary, adjust the recommended temperature and set the duration.

■ Follow the instructions in the display.

Food	◷ [min]
Fruit	120–480
Vegetables	180–480
Herbs *	50–60

◷ Dehydrating time

* Because this program uses the fan, you should use Surround mode ▭ set to a temperature of 175-250°F (80-100°C) for drying herbs.

■ Reduce the temperature if condensation begins to form in the oven.

⚠ Danger of burning!
Use pot holders when removing the food from the oven.

■ Allow the fruit or vegetables to cool down after dehydrating.

Dried fruit must be completely dry, but also soft and elastic. Juice should not escape when cut.

■ Store in sealed glass jars or tins.

Reheat

This mode is designed to reheat cooked food.

Only use heat-resistant containers that are microwave safe.

- Place the food that is to be reheated in a glass dish with a cover.
- Select Special Modes ✡.
- Select Reheat.
- Select the desired food category.
- Enter the weight of the food.
- Follow the instructions in the display.

⚠ Danger of burning!
Use pot holders when removing dishes. Condensation may accumulate on the bottom of the dishes.

Warm-up Cookware

This program is designed to warm your cookware.

The temperature can be set between 75-175°F (50-80°C).

Use heat-resistant cookware.

- Place the rack on shelf level 1 and place the cookware to be heated on it.
- Select Special Modes.
- Select Warm-up Cookware.
- If necessary, adjust the default temperature and set the duration.
- Follow the instructions in the display.

⚠ Danger of burns!
Use pot holders when removing dishes from the oven. Condensation may accumulate on the bottom of the dish.

Proof

This mode is designed specifically for proofing dough.

You can select a temperature setting from 75 through 125°F (30 through 50°C).

- Select Special Modes ✿.
- Select Proof dough.
- If necessary, adjust the recommended temperature and set the duration.
- Follow the instructions in the display.

Pizza

This program is designed specifically for baking pizza.

You can select a temperature setting from 300 through 475°F (160 through 250°C).

- Select Special Modes ✿.
- Select Pizza.
- If necessary, adjust the recommended temperature and set the duration.
- Follow the instructions in the display.

Sabbath Program

This mode is designed for religious observance.

Select Sabbath mode and then select the oven mode and temperature.

The program will only start once the door is opened and closed:

– The cooking process will begin after approx. 5 minutes in Surround mode ☰.

– The oven will heat up to the temperature you have set and will maintain this temperature for a maximum of 72 hours.

– The cavity lighting does not come on, even when the door is opened.

If Settings – Lighting – On has been selected, the lighting will remain turned on throughout the program.

– Sabbath Program appears in the display constantly.

– The time of day is turned off.

Once the Sabbath program has started it cannot be changed or saved as a Favorites.

Using the Sabbath program

The program can only be canceled by turning the oven off.

- Select Special Modes ✡.
- Select Sabbath Program.
- Select Surround ▭.

The Sabbath program cannot be started if the timer is being used.

- Set the temperature.
- Confirm with OK.

The oven is now ready for use.

Sabbath Program ✡ and the temperature set will appear.

- Open the door to start the program.
- Place the food in the oven.
- Close the door.

The oven heating will turn on after 5 minutes.

To end the program early:

- Turn the oven off.

Gentle Bake

The Gentle Bake mode is ideal for casseroles and gratins.

You can select a temperature setting from 200-450°F (100-230°C).

- Select Operating Modes ▭.
- Select Gentle Bake and change the default temperature if necessary.
- Follow the instructions on the display.

Canning

Always observe USDA food safety guidelines.

Canning Containers

⚠ Danger of injury!
Do not use the appliance to heat up or can food in sealed jars or containers.
Pressure will build up inside them and they can explode causing damage to the appliance, as well as the risk of injury and scalding.

Convection Bake

For canning large quantities of fruit and vegetables [max. 5 jars, 1/2 pint (1/2 l) each].

- Only use jars designed for canning:
  - Canning jars, or
  - Jars with twist-off lids.

Microwave

For canning small quantities of fruit and vegetables.

- Only use special jars for canning.

Sparking can be cause by metal brackets on jars!
Close the jars with clear adhesive tape or with clips suitable for microwave use.Never use metal clips or jars with screw-on lids.

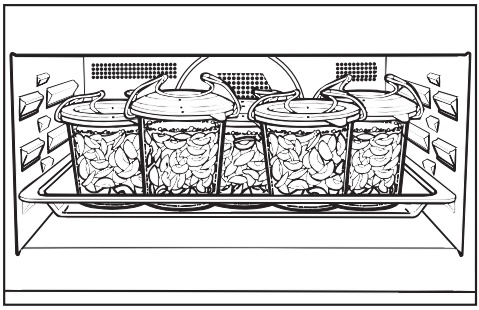

- Prepare the jars in the usual way. Fill the jars up to 3/4" (2 cm) below the rim.

Convection Bake

5 Jars 1/2 pint (1/2 liter) [1]	Temperature	Time from simmering point [2] [min]	Continued warming duration [min]
Fruit / Cucumbers	300-340°F (150-170°C) until simmering. Allow to stand in the turned off oven afterwards.	None	25–30
Asparagus, Carrots	300-340°F (150-170°C) until simmering. Then continue cooking at 212°F (100°C).	60–90	25–30
Peas, Beans		90–120	25–30

Microwave

5 Jars 1/2 pint (1/2 liter) [1]	Microwave power level	Time until simmering point [2] [min]	Time from simmering point [2] [min]
Fruit / Cucumbers	Level 6 until simmering. Leave to stand in the turned off oven afterwards.	3–15 depending on number of jars	–
Asparagus, Carrots	Level 6 until simmering. Then continue cooking at level 4.	3–15 depending on number of jars	approx. 15
Peas, Beans			approx. 25

[1] Glass tray on shelf level 1

[2] Simmering = Consistent bubbling

After canning

⚠ Danger of burns!
Use pot holders when removing the jars from the oven.

- Take the jars out of the oven.
- Cover the jars with a towel and leave to set for approx. 24 hours.
- Remove any clips or the adhesive tape.
- Make sure all jars are closed properly when storing them.

Frozen food

Tips

Cakes, pizza, baguettes

- Bake on parchment paper placed on the wire oven rack.
- Use the lowest temperature recommended by the manufacturer.

French fries, croquettes and similar items

- Place these frozen foods on the glass tray.
  Place parchment paper underneath.
- Use the lowest temperature recommended by the manufacturer.
- Turn several times during cooking.

Preparation

Handling food carefully will help protect your health.

- Select the oven mode and temperatures recommended on the food's packaging.
- Preheat the oven.
- Place the food in the preheated oven on the shelf level recommended on the packaging.
- Check the food at the end of the shortest time recommended on the packaging.

⚠ Danger of burning!
The heater elements must be turned off. Make sure the oven has cooled down.

⚠ Risk of injury!
The steam from a steam cleaning appliance could reach live electrical components and cause a short circuit.
Do not use a steam cleaner to clean this appliance.

All surfaces could be discolored or damaged if unsuitable cleaning agents are used. The oven front is particularly susceptible to damage from oven cleaners.
All surfaces of this machine are susceptible to scratching. Scratches on glass can in some circumstances lead to breakage.
Remove all cleaning agent residues immediately.

Stubborn soiling may damage the oven.
Once the oven has cooled clean the oven, the inside of the door, and the door seal. Waiting too long to clean the oven will make if much more difficult to clean.

Check the door and door seal for any sign of damage. If any damage is seen, the oven should not be used again. Contact Miele.

Unsuitable cleaning agents

To avoid damaging the surfaces of your appliance, do not use:

- cleaning agents containing soda, ammonia, acids, or chlorides
- cleaning agents containing descaling agents on the oven front
- abrasive cleaning agents, e.g., powder cleaners and cream cleaners,
- solvent-based cleaning agents
- stainless steel cleaning agents
- dishwasher cleaners
- glass cleaners
- cleaning agents for ceramic cooktops
- hard, abrasive brushes or sponges, e.g., pot scourers, brushes, or sponges which have been previously used with abrasive cleaning agents)
- eraser sponges
- sharp metal scrapers
- steel wool
- stainless steel scouring pads
- spot cleaning with mechanical cleaning agents
- oven cleaners *

* These can, however, be used to remove very heavy soiling from PerfectClean treated surfaces

If soiling is allowed to sit for any length of time, it may become impossible to remove. If items are used frequently without being cleaned, it may become very difficult to clean them.

Soiling is, therefore, best removed after each use.

Only the glass tray is dishwasher proof.

Tips

- Soiling caused by spilt juices and cake mixtures is best removed while the oven is still warm. Use caution and make sure the oven is not too hot - Danger of burns.
- The Browning/Broiling element can be lowered for easier cleaning.
- To neutralize odors in the oven, put a container of water with some lemon juice in the oven and heat for a few minutes.

Normal soiling

Moisture inside the oven can cause damage.

Wipe out the oven with a damp cloth so no excess moisture enters the interior of the appliance through the openings.

- Remove normal soiling immediately using a clean sponge with warm water and liquid dish soap applied with a clean, damp microfiber cloth.
- After cleaning, ensure that any detergent residue is removed with clean water.
  This is particularly important when cleaning surfaces treated with PerfectClean enamel as detergent residue can impair the non-stick properties.
- After cleaning, dry the surfaces with a soft cloth.

Roast Probe

⚠ Do not put the roast probe into water or clean it in the dishwasher, this will damage it.

Clean the roast probe with a damp towel.

Stubborn soiling

Spilled fruit and roasting juices may cause lasting discoloration or matte patches. This does not affect the functional characteristics of the finish.

Do not attempt to remove these marks. Clean them following the instructions given here.

- Moisten stubborn soiling with a solution of warm water and liquid dish soap, leave for a few minutes to take effect.
- If necessary, the rough side of a dish sponge can be used to remove the soiling.
- After cleaning, rinse thoroughly with clean water, and dry with a soft cloth.
- Stubborn soiling on PerfectClean surfaces can be cleaned using Miele Oven Cleaner. Follow the instructions on the packaging.

Non-Miele oven cleaner must only be used in a cold oven and not left on for longer than a maximum of 10 minutes.

- If necessary, the scouring pad on the back of a non-scratching washing-up sponge can be used to remove the soiling after the holding time.
- After cleaning, remove all oven cleaning agent residues thoroughly with clean water, and then dry the surfaces.

Lowering the Browning / Broiling element

If the oven interior is very dirty, the Browning / Broiling element can be lowered. It is recommended to clean the oven interior with a damp sponge regularly.

⚠ Burn hazard!
Make sure the heating elements are turned off and allowed to cool completely.

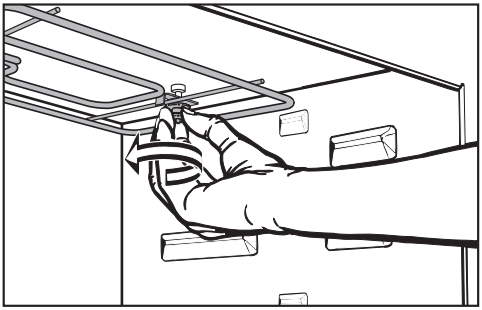

- Unscrew the nut and lower the Browning / Broiling element.

Use caution not to damage the Browning / Broiling element.
Do not use force to lower the Browning / Broiling element.

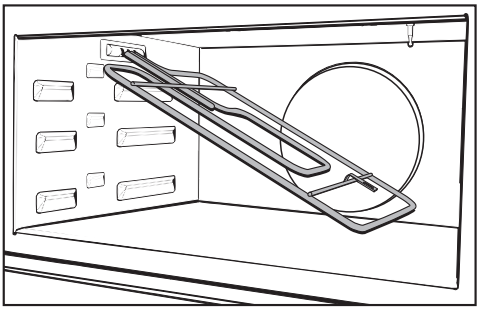

- Carefully lower the Browning / Broiling element.

The cover at the top of the oven cavity can be damaged.
Do not use the hard side of a dish sponge to clean the cover.

- Clean the oven interior with a damp cloth or sponge.
- After cleaning, raise the Browning / Broiling element gently back up again. Refit the nut and tighten to secure the element back in position.

Frequently Asked Questions

With the help of the following guide minor faults in the performance of the machine, some of which may result from incorrect operation, can be remedied without contacting the Service Department.

This guide may help you to find the reason for the fault, and how to correct it.

Problem	Possible cause and solution
The display is dark.	The time of day display is deactivated. When the appliance is turned off, the time of day display is turned off. ■ As soon as the oven is turned on, the time of day will appear. If you want it to be displayed continuously, the setting to turn the time of day display back on must be changed (see “Settings – Time of day – Display”).
	There is no power to the appliance. ■ Check if the breaker has tripped. If it has, contact a qualified electrician or Miele Technical Service.
A program will not start.	If running a program with Microwave, the door is open. ■ Check if the door is closed properly.
	If running a program with Microwave, a microwave power level or cooking time have not been set. ■ Be sure to set the power level and cooking time.
	If running a Combi mode, all necessary setting have not been set. ■ Be sure to set the microwave power level, temperature and cooking time.

Problem	Possible cause and solution
System Lock 🔒 **appears in the display when the oven is turned on.**	The system lock 🔒 is activated. ■ You can unlock the oven to start a cooking program by pressing 🔒 for at least 6 seconds. ■ To permanently deactivate the lock, see “Settings - System Lock 🔒”.
The oven does not heat up.	Demo mode is activated. The oven can be operated but will not heat up. ■ Deactivate Demo mode (see “Settings – Showroom Program”).
Power Failure - Program Canceled **appears in the display.**	There has been a brief power failure which has caused the current cooking process to stop. ■ Turn the oven off and then back on again. ■ Restart the cooking process.
12:00 **appears in the display.**	The power supply was interrupted for longer than 200 hours. ■ Reset the date and time.
Maximum operating duration reached **appears in the display.**	The oven has been operating for an unusually long period of time; this has activated the safety shut-off. ■ Confirm with *OK*. Clear the message Program Finished by selecting ⮌. The oven is now ready to use again.
⚠ Fault XX **appears in the display.**	A fault has occurred that you cannot resolve. ■ Contact Miele Technical Service.
The core temperature cannot be set.	The roast probe is not recognized by the oven. ■ Check whether the roast probe is correctly plugged into the socket. If the oven still does not recognize the roast probe, it must be faulty. A replacement roast probe can be ordered from Miele.
If the door is opened while using “Microwave” ≋, the oven stops making a noise.	This is not a fault. If the door is opened while “Microwave” ≋ is being used, the door contact switch will turn off the microwave and switch the cooling fan to a lower speed.

Problem	Possible cause and solution
A noise is heard after the cooking process is complete.	The fan remains turned on after a cooking program (see “Settings - Cooling fan”).
An strange sound is heard when the oven is operating in microwave mode.	Metal was used in the oven during a program with microwave. ■ Check if there are sparks caused by using metal dishes (see “Suitable containers for microwave use”).
	When using a program with microwave the dish was covered with alumimum foil. ■ If necessary, remove the cover.
	The wire oven rack was used during a program with microwave. ■ Always use the glass tray for programs with microwave.
The oven has turned itself off.	The oven turns off automatically if a button is not pressed after a certain amount of time or after a cooking program has ended to save power. ■ Turn the oven back on.
Baked goods are not cooked properly after following the times given in the chart.	A different temperature than that given in the recipe was used. ■ Select the temperature required for the recipe.
	The ingredient quantities are different from those given in the recipe. ■ Double check the recipe. The addition of more liquid or more eggs will make a wetter mixture which will take longer to cook.
The browning is uneven.	The wrong temperature or shelf level was selected. ■ There will always be a slight unevenness. If the unevenness is great, check whether the correct temperature and shelf level were selected.
	The cookware used was not right for the program chosen. Bright, shiny pans are not very suitable. These reflect heat, which means that the heat does not penetrate to the food effectively, resulting in uneven or poor browning. ■ Dark, matte pans are best for baking.

Problem	Possible cause and solution
The food is not sufficiently heated or is not cooked at the end of a set duration when using Microwave (Solo) ≋.	Check that the program was restarted after interrupting a cooking process using microwave power. ■ Restart the program to ensure the food is heated or cooked properly.
	When cooking for heating with microwave, the time set was too short. ■ Check that the correct time is selected for the microwave power level. The lower the microwave power level the longer the cooking time.
The food has cooled down too quickly after being reheated or cooked in microwave mode.	Due to the microwave properties, the heat is generated first at the edges of the food and is then transferred to the center of the food. If the food is heated with a high microwave power level the food may be hot on the outside but not heated through to the center. ■ When cooking foods with different sizes, such as with menu cooking, a lower microwave power level for a longer period of time is most suitable.
The oven lighting turns off after a short time.	The oven is factory set to turn off automatically after 15 seconds. This setting can be changed (see “Settings - Lighting”).

Problem	Possible cause and solution
The oven lighting does not turn on. 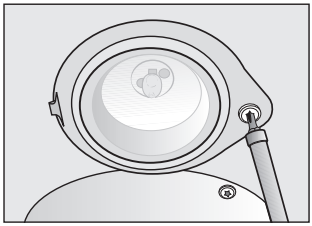	The halogen bulb needs to be replaced. ⚠ Danger of burns! Make sure the heating elements are turned off and allowed to cool completely. The light cover consists of two seperate parts, a glass cover and mounting. If it falls it can be damaged. When removing the cover hold it firmly so that it does not fall. Place a towel on the oven floor and open door to avoid damage. ■ Disconnect the appliance from the power supply. ■ Remove the screw to the lamp cover using a T20 Torx screwdriver, and take off the cover. ■ Do not touch the halogen bulb with bare fingers. Observe the manufacturers instructions. Remove the halogen bulb. ■ Replace it with a new halogen bulb (Sylvania 66740, 120 V, 40 W, G9, FS1). It must be thermally stable up to 575°F (300°C). ■ Replace the glass piece in the mounting, and refit the lamp cover. Make sure that the lug on the mounting is correctly located in the notch in the roof of the oven, then screw the mounting back into place. ■ Reconnect the oven to the electrical supply.

Contact in case of fault

In the event of a fault which you cannot remedy yourself, please contact your Miele dealer or Miele Technical Service.

Contact information for Miele Technical Service can be found at the end of this document.

Please quote the model and serial number of your appliance when contacting Miele. Both pieces of information can be found on the data plate.

The data plate is visible on the front frame of the oven, with the door fully open.

Warranty

For further information, please refer to your warranty booklet.

Caring for the environment

Disposal of the packing material

The cardboard box and packing materials protect the appliance during shipping. They have been designed to be biodegradable and recyclable.

Ensure that any plastic wrappings, bags, etc. are disposed of safely and kept out of the reach of children. Danger of suffocation!

Disposal of your old appliance

Electrical and electronic appliances contain valuable materials. They also contain certain substances, compounds and components which were essential for the proper functioning and safe use of the equipment. Handling these materials improperly by disposing of them in your household waste can be harmful to your health and the environment. Therefore, please do not dispose of your old appliance with regular household waste and follow local regulations on proper disposal.

Consult with local authorities, dealers or Miele in order to dispose of and recycle electrical and electronic appliances. Miele assumes no responsibility for deleting any personal data left on the appliance being disposed. Please ensure that your old appliance is kept away from children until removal. Observe safety requirements for appliances that may tip over or pose an entrapment hazard.

⚠ CAUTION:
Before servicing, disconnect the power supply by either removing the fuse, shutting off the power main or manually “tripping” the circuit breaker.

Installation, repair and maintenance work must be performed by a Miele authorized service technician. Work by unqualified persons could be dangerous and may void the warranty.

Before connecting the appliance to the power supply, make sure that the voltage and frequency listed on the data plate correspond with the household electrical supply. This data must correspond to prevent machine damage. Consult an electrician if in doubt.

Only operate the appliance after it has been installed into cabinetry.

The plug must be inserted into a suitable outlet that has been installed and grounded in compliance with all applicable local regulations.

WARNING: THIS APPLIANCE MUST BE GROUNDED

Installer: Please pass these instructions on to the customer.

Electrical connection

The oven is equipped with a power cord approx. 6 ft. (1.8 m) in length with a 4-prong NEMA 14-30P plug ready for connection to the power supply:

– 120/208 V, 30 A, 60 Hz

or

– 120/240 V, 30 A, 60 Hz

The voltage can be adjusted (see “Settings - Electrical Version”).

SAVE THESE INSTRUCTIONS FOR THE ELECTRICAL INSPECTOR'S USE.

Installation diagrams H6700BM, H6800BM

Appliance and cut-out dimensions

Miele ovens can be installed flush or proud. Discuss your installation requirements with your architect, designer and installer.

Installation in a tall cabinet

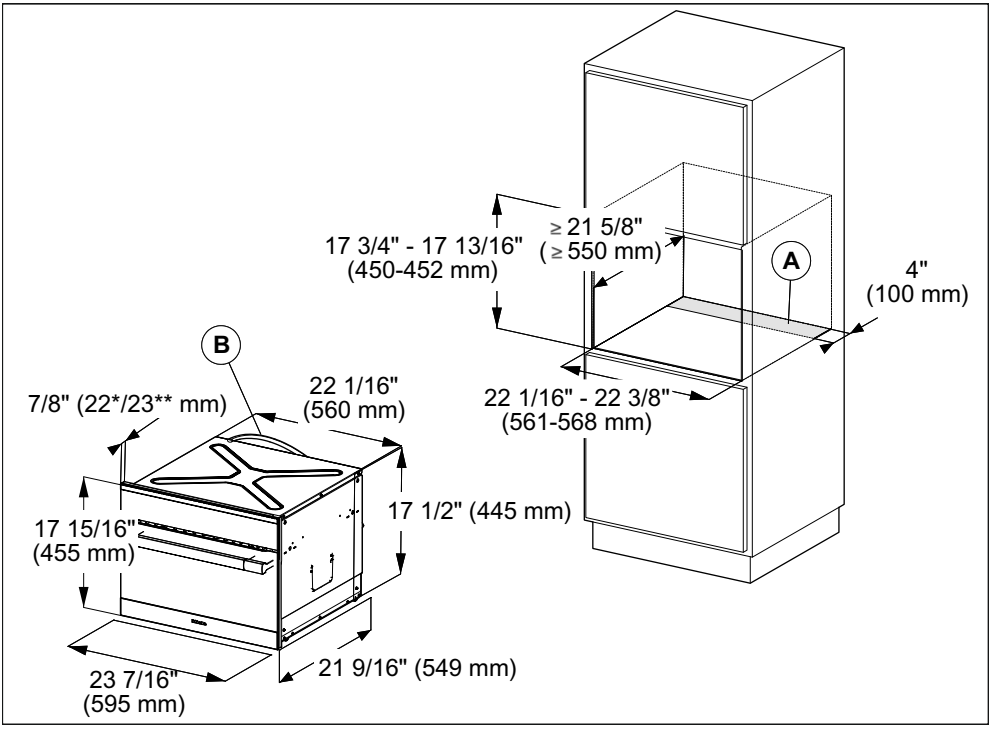

Ⓐ Cut-out (4" x 22" / 100 mm x 560 mm) in the bottom of the cabinet for power cord and ventilation

Ⓑ Power cord with plug

* Oven with glass front

** Oven with metal front

Depending on the model, the oven front may differ from the one shown the drawing. Current specifications can be found on the Miele website.

Undercounter installation

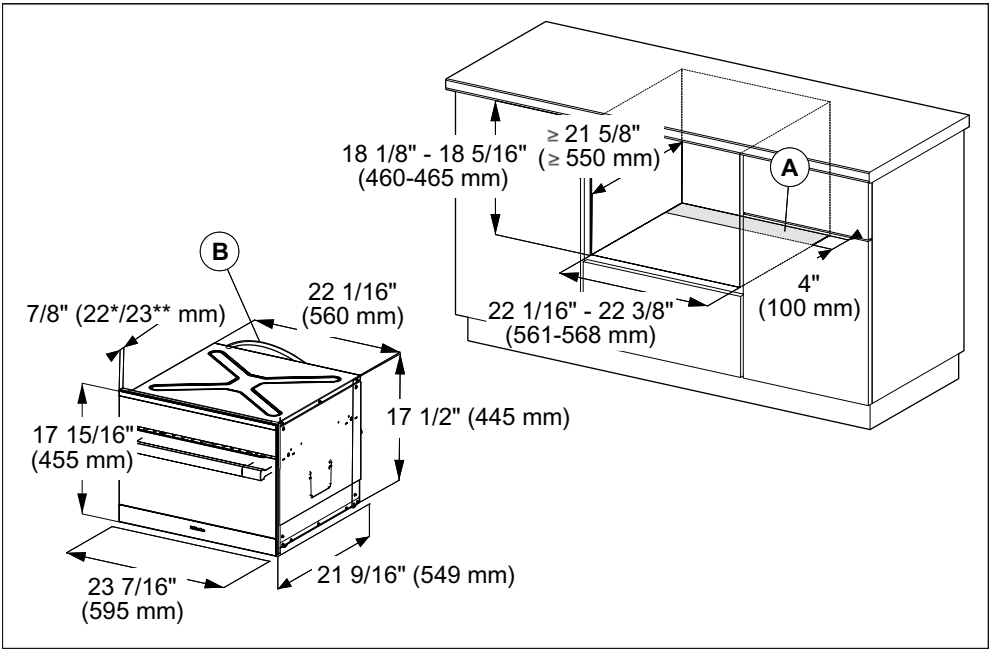

Ⓐ Cut-out (4" x 22" / 100 mm x 560 mm) in the bottom of the cabinet for power cord and ventilation

Ⓑ Power cord with plug

* Oven with glass front

** Oven with metal front

Depending on the model, the oven front may differ from the one shown the drawing. Current specifications can be found on the Miele website.

Installation diagrams H6700BM, H6800BM

Combination installation with an oven into a tall cabinet

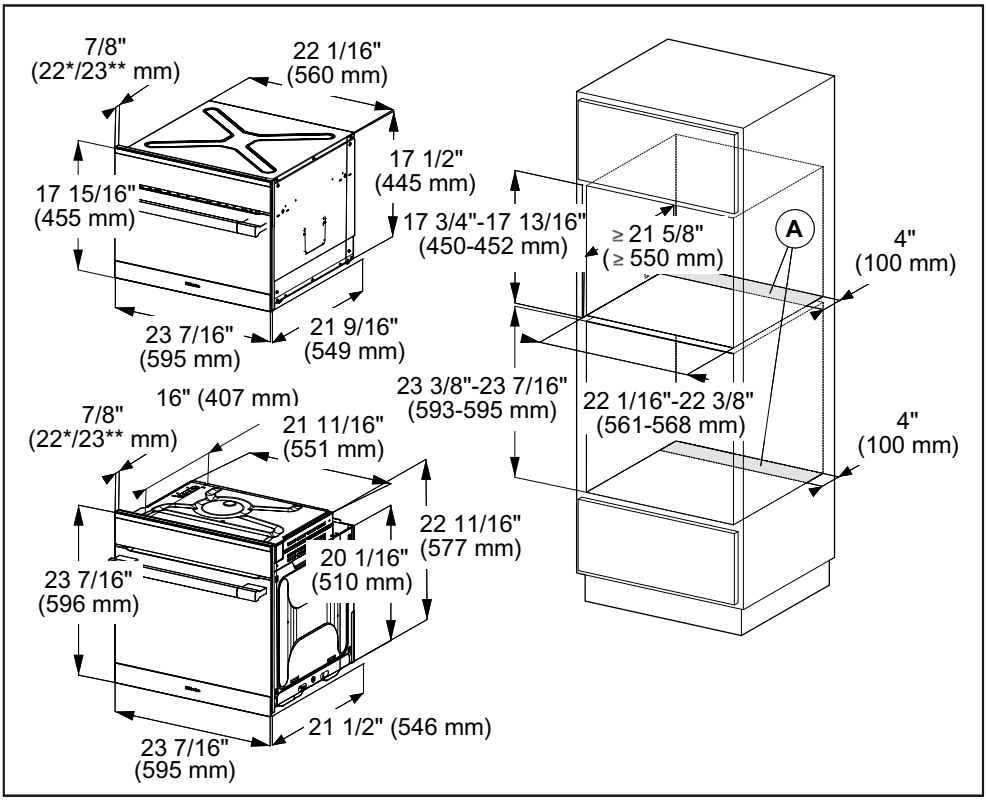

Ⓐ Cut-out (4" x 22" / 100 mm x 560 mm) in the bottom of the cabinet for power cord and ventilation

* Oven with glass front

** Oven with metal front

Depending on the model, the oven front may differ from the one shown the drawing. Current specifications can be found on the Miele website.

Front dimensions

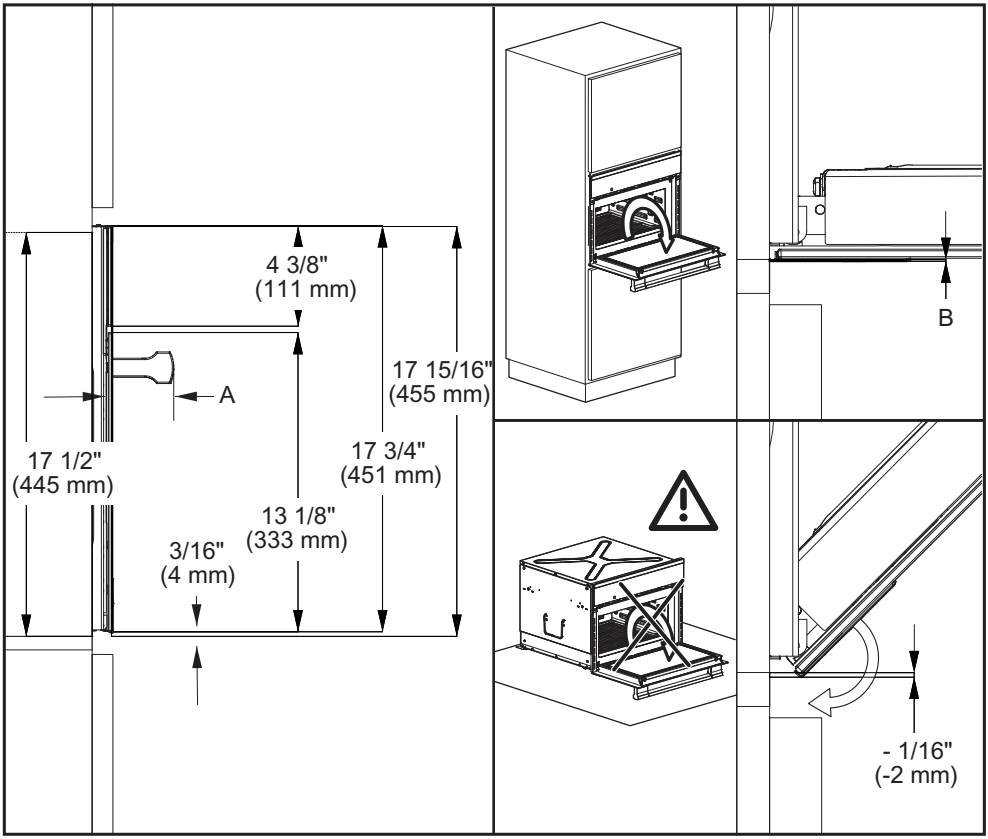

A H67xx: 2 3/4" (69 mm)

H68xx: 1 5/8" (42 mm)

B Oven with glass front: 1/16" (2.2 mm)

Oven with metal front: 1/16" (1.2 mm)

Installation diagrams H6770BM, H6870BM

Appliance and cut-out dimensions

Miele ovens can be installed flush or proud. Discuss your installation requirements with your architect, designer and installer.

Installation in a tall cabinet

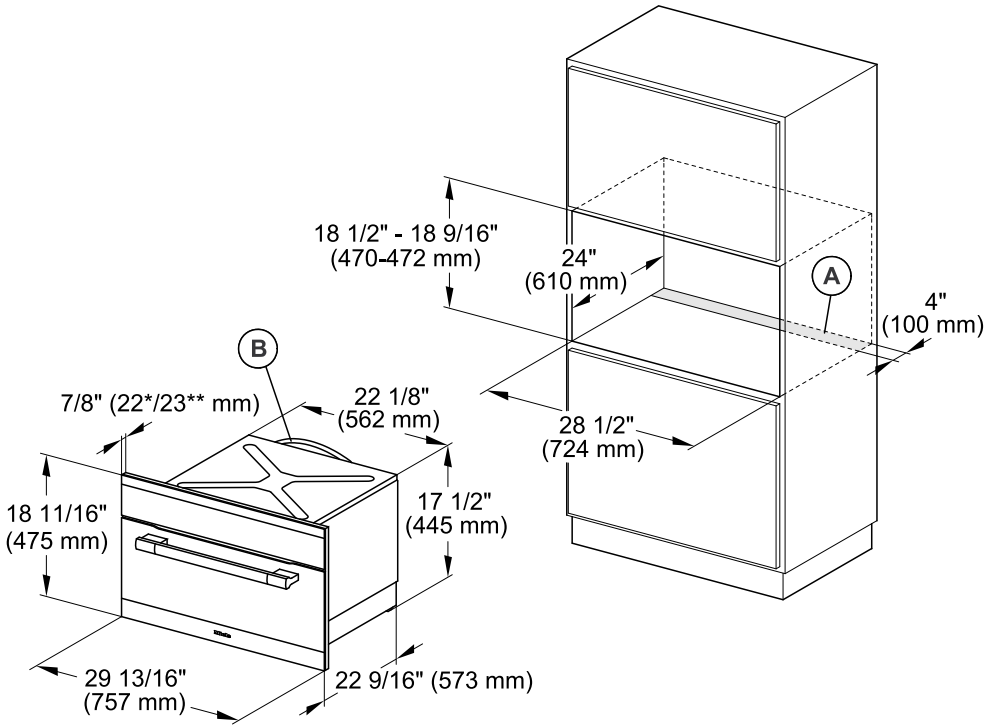

Ⓐ Cut-out (4" x 28 3/8" / 100 mm x 720 mm) in the bottom of the cabinet for power cord and ventilation

Ⓑ Power cord with plug

* Oven with glass front

** Oven with metal front

Depending on the model, the oven front may differ from the one shown the drawing. Current specifications can be found on the Miele website.

Undercounter installation

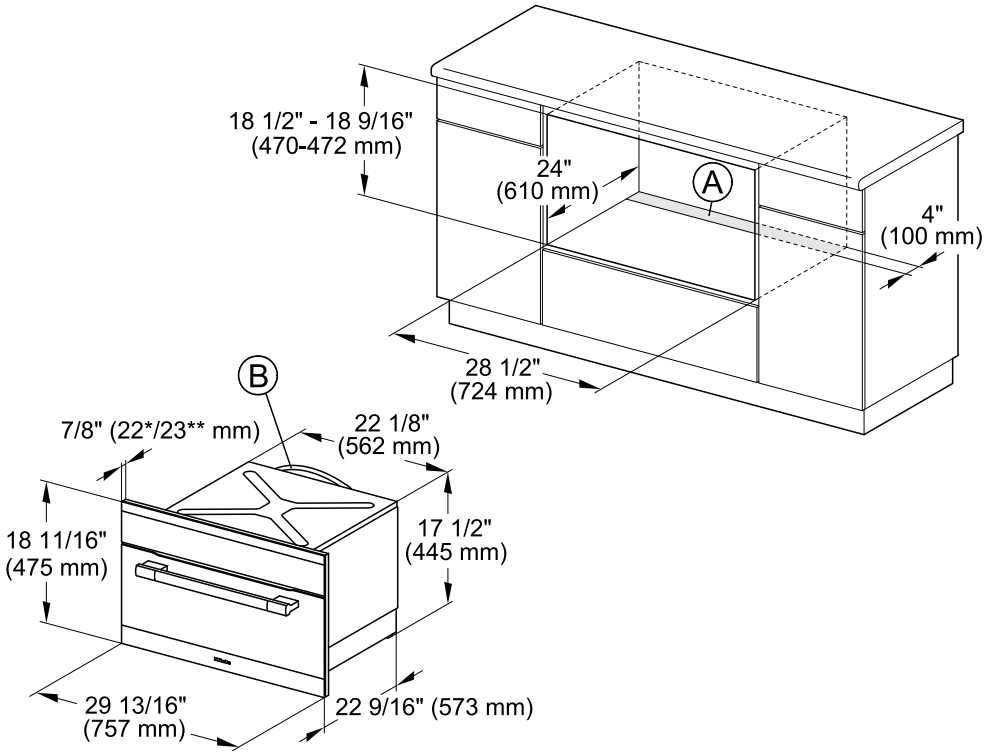

Ⓐ Cut-out (4" x 28 3/8" / 100 mm x 720 mm) in the bottom of the cabinet for power cord and ventilation

Ⓑ Power cord with plug

* Oven with glass front

** Oven with metal front

Depending on the model, the oven front may differ from the one shown the drawing. Current specifications can be found on the Miele website.

Installation diagrams H6770BM, H6870BM

Combination installation with an oven into a tall cabinet

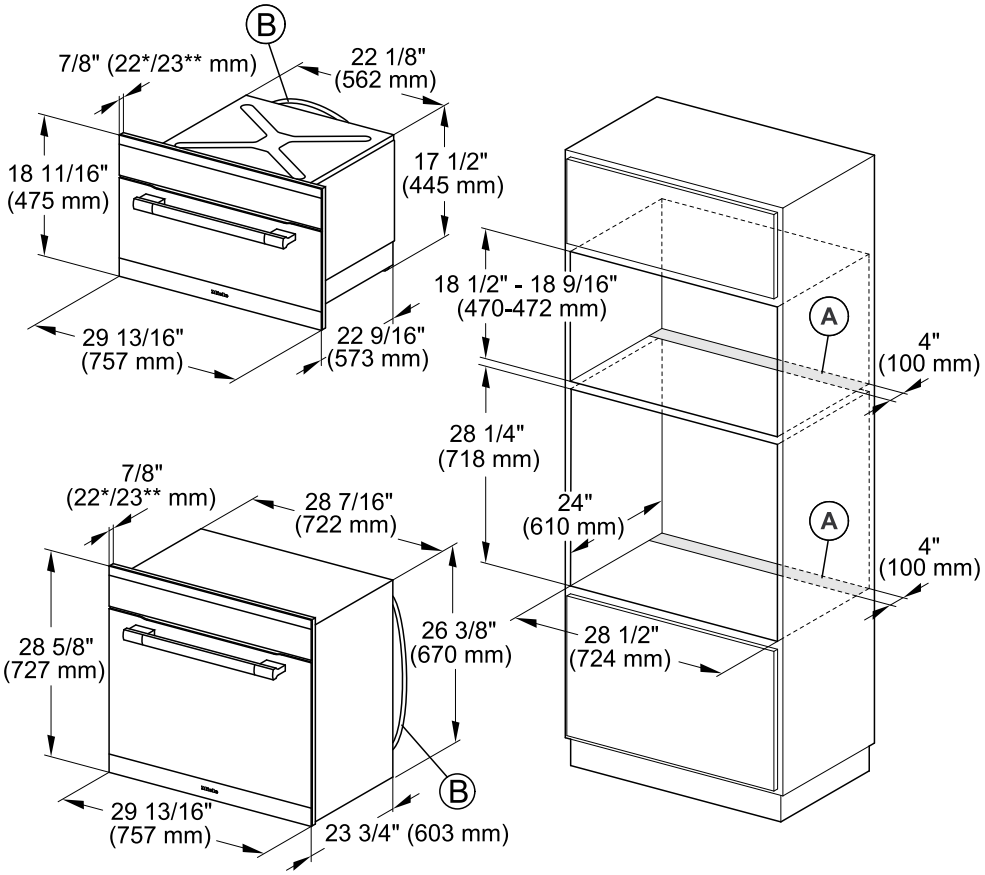

Ⓐ Cut-out (4" x 28 3/8" / 100 mm x 720 mm) in the bottom of the cabinet for power cord and ventilation

Ⓑ Power cord with plug

* Oven with glass front

** Oven with metal front

Depending on the model, the oven front may differ from the one shown the drawing. Current specifications can be found on the Miele website.

Front dimensions

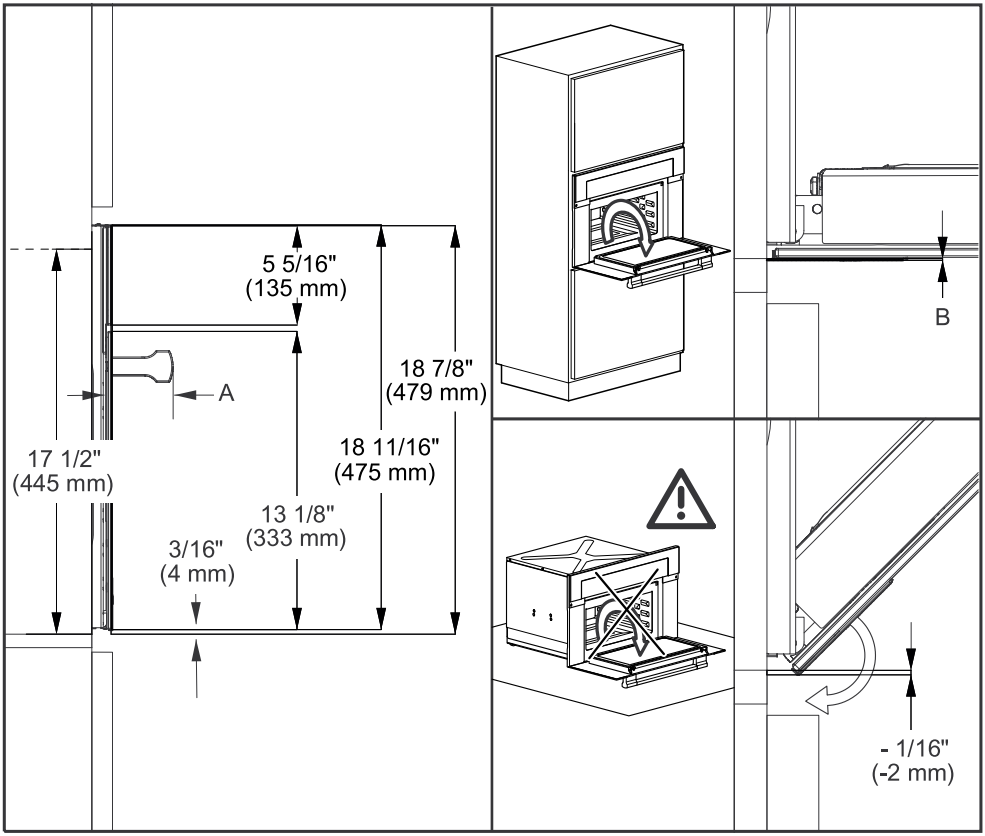

A H67xx: 2 3/4" (69 mm)

H68xx: 1 5/8" (42 mm)

B Oven with glass front: 1/16" (2.2 mm)

Oven with metal front: 1/16" (1.2 mm)

⚠ The oven must not be operated until it has been properly installed within cabinetry.

Mounting the door handle (depending on model)

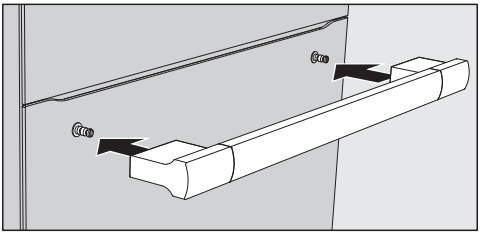

- Mount the handle onto the retaining bolts.

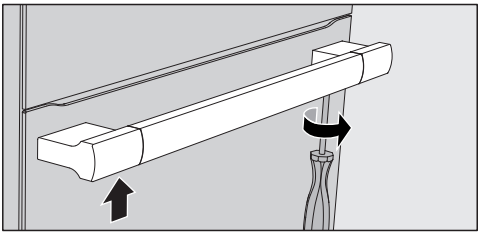

- Use the supplied Allen wrench to tighten all four bolts.

- If there are side handles, please remove them.
- Connect the power cord to the electrical supply.
- Push the oven into the cabinetry up to the oven trim and align it.

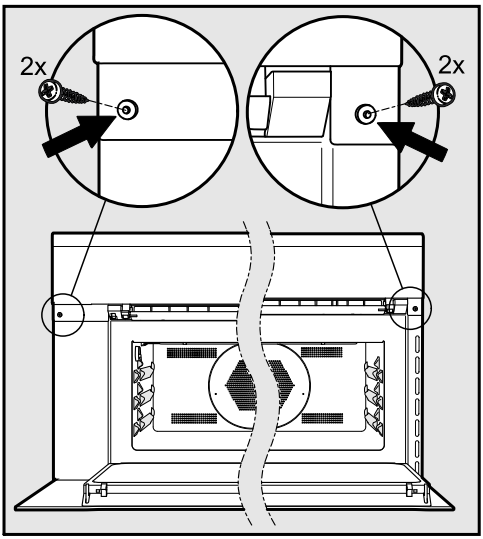

- Open the door and use the screws supplied to secure the oven to the side walls of the cabinetry through the holes in the oven trim.

Copyright and licenses

Miele uses software to operate and control the appliance.

The copyright authorization from Miele and other relevant software suppliers (e.g. Adobe) must be respected.

Miele and their suppliers reserve the rights to the software components.

In particular the following are prohibited:

- copying and distribution,
- modifications and derivations,
- decompilation, reverse engineering, disassembling and other such reductions of software.

This product contains Adobe® Flash® Player Software under licence from Adobe Systems Incorporated, Adobe Macromedia Software LLC. Adobe and Flash are registered trademarks of Adobe Systems Incorporated.

Components which fall under GNU General Public Licence and further Open Source licenses are integrated into the software.

An overview of the integrated Open Source components and a copy of the current licence can be obtained at http://www.miele.com/device-software-licenses. You will need to enter the specific product name.

Miele will provide the source code for all components of software licensed under the GNU General Public License and comparable Open Source licenses.

For source code requests, please email info@miele.com.

Please have the model and serial number of your appliance available when contacting Technical Service.

Miele

U.S.A.

Miele, Inc.

National Headquarters
9 Independence Way
Princeton, NJ 08540
Phone: 800-843-7231
Fax: 609-419-4298
www.mieleusa.com

Technical Service & Support
Phone: 800-999-1360
Fax: 888-586-8056
TechnicalService@mieleusa.com

International Headquarters
Miele & Cie. KG
Carl-Miele-Straße 29
33332 Gütersloh
Germany

Canada

Importer
Miele Limited

Headquarters and Miele Centre
161 Four Valley Drive
Vaughan, ON L4K 4V8
www.miele.ca

Customer Care Centre
Phone: 800-565-6435
905-532-2272
customercare@miele.ca

Miele

H6700BM; H6800BM; H6770BM; H6870BM

en-US, CA

M.-Nr. 10 231 201 / 03