Eemax™
Hot Water Solutions Made Easy

INSTALLATION GUIDE AND OWNER'S MANUAL

FlowCo™

ELECTRIC INSTANTANEOUS WATER HEATERS



⚠WARNING ***BEFORE ATTEMPTING ANY INSTALLATION, MODIFICATION OR SERVICE OF THIS HEATER, MAKE SURE THE ELECTRICAL POWER IS DISCONNECTED.***

Read and understand the instructions thoroughly before attempting the installation or service of this water heater. Failure to follow the instructions can result in serious injury, death and/or property damage. The warranty of the water heater will depend upon proper installation according to the instructions. Some heaters come supplied with separate faucet aerators. If supplied, the aerator must be installed in the faucet for optimum performance. The heater must only be used to heat water and must be installed in a location where it is not subject to freezing temperatures. The manufacturer is not liable for any damages resulting from improper installation or misuse.

The installation must conform to the latest requirements of the National Electrical Code and all applicable state and local codes. This information is available through local authorities. You must understand the requirements before beginning this installation.

This unit is not required by UL 499 to employ a temperature and pressure relief valve (T&P). You should check with local codes to find out if one is required. If it is, it must be installed in the outlet hot water pipe between the heater and the isolation valve.

IMPORTANT SAFETY INSTRUCTIONS

When using this electrical equipment, basic safety precautions should always be followed, including the following:

READ AND FOLLOW ALL INSTRUCTIONS

Supply this appliance only from a grounded system. A green terminal (or a wire connector marked “G”, “GR, “Ground”, or “GROUNDING”) is provided for wiring the appliance. To reduce the risk of electric shock, connect this terminal or connector to the grounding terminal of the electric service or supply panel with a continuous copper wire in accordance with the electrical installation code.

Contents

GENERAL 3
1) MOUNTING THE UNIT TO THE WALL 4
2) PLUMBING HOOK-UP 5
3) ELECTRICAL HOOK-UP 8
4) COMMISSIONING THE HEATER 10
5) TROUBLESHOOTING 13
6) PERIODIC MAINTENANCE 14
7) PART NUMBERS FOR FITTINGS, AERATORS AND AERATOR ADAPTORS 15
8) REPAIR PARTS FOR FLOWCO UNITS 15

⚠CAUTION ***DO NOT INSTALL IN A BATH ENCLOSURE OR SHOWER STALL OR CONNECT TO A SALT-REGENERATED WATER SOFTENER OR A WATER SUPPLY OF SALT WATER. ATTENTION: NE PAS INSTALLER DANS UNE BAIGNOIRE OU UNE CABINE DE DOUCHE ET NE PAS BRANCHER À UN ADOUCISSEUR D'EAU RÉGÉNÉRÉ AVEC DU SEL OU À UN APPROVISIONNEMENT EN EAU SALÉE.***

⚠CAUTION ***(CANADIAN INSTALLATIONS ONLY) CONNECT ONLY TO A CIRCUIT PROTECTED BY A CLASS A GROUND FAULT CIRCUIT INTERRUPTER. ATTENTION: BRANCHER UNIQUEMENT À UN CIRCUIT PROTÉGÉ PAR UN DISJONCTEUR DE FUITE DE TERRE DE CLASSE A.***

⚠CAUTION ***(CANADIAN INSTALLATIONS ONLY) USE COPPER CONDUCTORS ONLY. USE BONDING CONDUCTOR IN ACCORDANCE WITH THE CANADIAN ELECTRICAL CODE PART I. UTILISEZ DEZ CONDUCTEURS EN CUIVE UNIQUEMENT. UTILISEZ DES CONDUCTEURS DE MIZE À LA MASSE CONFORMEMENT AU CODE CANADIEN DE L'ÉLECTRICITÉ, PARTIE I.***

SAVE THESE INSTRUCTIONS

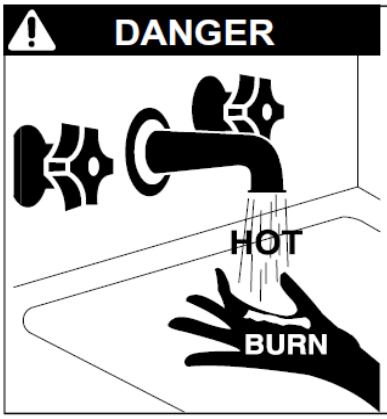

Hot water can be dangerous, especially for infants or children, the elderly, or infirm. There is hot water scald potential if the thermostat is set too high.

Water temperatures over 125° F (51° C) can cause severe burns or scalding resulting in death.

Hot water can cause first degree burns with exposure for as little as:

3 seconds at 140° F (60° C)

20 seconds at 130° F (54° C)

8 minutes at 120° F (48° C)

Test the temperature of the water before placing a child in the bath or shower.

Do not leave a child or an infirm person in the bath unsupervised.

GENERAL

The Eemax, Inc.™ **FlowCo** is a non-thermostatic electric tankless water heater. FlowCo is specifically designed to take in cold water and heat it to temperatures suitable for handwashing and other fixed-flow applications.

To obtain optimum performance and energy savings, the unit should be located as close as possible to the point-of-use. The unit is supplied with compression rings and nuts suitable for direct coupling to 3/8" copper or PEX™ piping. Do not use additional screwed fittings, pipe dope or teflon tape – doing so will void the warranty. **DO NOT SOLDER PIPES WHILE THE UNIT IS INSTALLED** as serious damage to the heater will result and the warranty will be voided.

1) MOUNTING THE UNIT TO THE WALL

⚠CAUTION ***THIS HEATER MUST BE INSTALLED IN A LOCATION WHERE IT IS NOT SUBJECT TO FREEZING TEMPERATURES.***

1. The heater should be mounted on the wall under the sink, as close to the point-of-use as possible. Ideal position is fittings pointed down, but the heater can be mounted in any orientation.

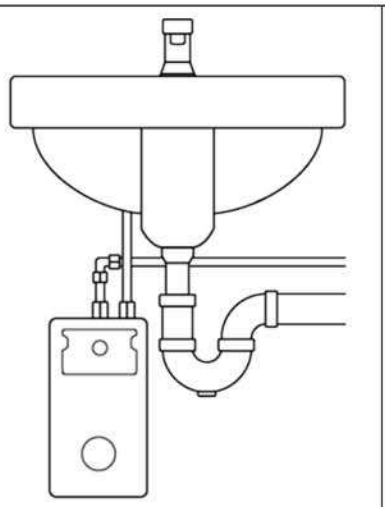

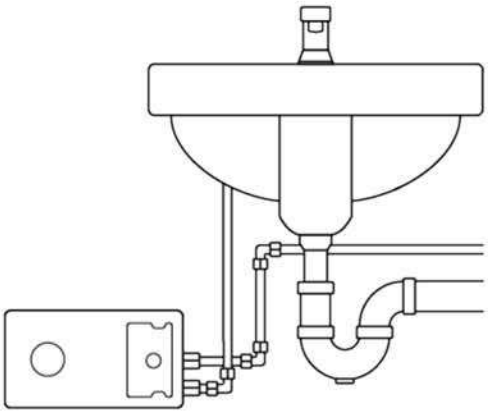



2. Make sure to leave a minimum of 8 inches service clearance at the end **OPPOSITE** the fittings.



3. Remove the cover and fasten to the wall using the four mounting holes at each corner of the back plate. Replace the cover.

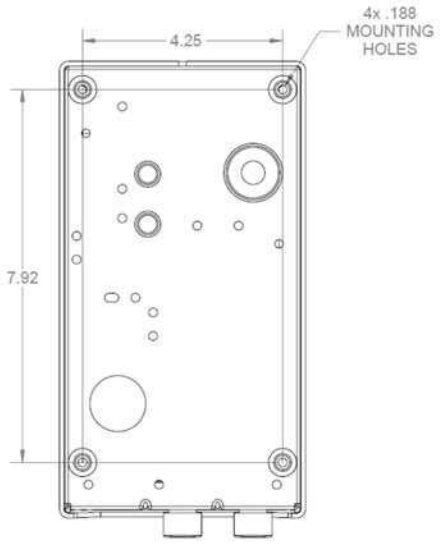

2) PLUMBING HOOK-UP

The heater is supplied with 3/8" brass compression fittings that are compatible with either copper or plastic pipes. Make sure these fittings are used for this installation. Contact your Eemax representative for further information.

> ⚠CAUTION ***NEVER SUBSTITUTE THREADED PIPE FITTINGS USING PIPE DOPE OR TEFLON TAPE AND NEVER SOLDER ANY PIPE CONNECTIONS WHILE ATTACHED TO THIS HEATER BECAUSE DAMAGE TO THE HEATER WILL RESULT. DOING THIS WILL VOID THE WARRANTY!***

Eemax strongly recommends that the heater be supplied directly from the main cold water trunk line when possible. This helps to avoid a potential water flow interruption to the heater which could lead to a failure of the heating element.

System Requirements:

- **Minimum/maximum working pressure: 30 PSI/150 PSI**
- **Optimal operating pressure range: 35 to 80 PSI**
- **Minimum turn on flow rate is model dependent (refer to the table below)**

Base Model*	Turn On Flow Rate, GPM (LPM)						
	0.2 (0.76)	0.25 (0.95)	0.3 (1.14)	0.4 (1.51)	0.5 (1.89)	0.7 (2.65)	0.8 (3.03)
SPEX1812	•						
SPEX2412		•					
SPEX3012		•					
SPEX3512			•				
SPEX35			•				
SPEX48				•			
SPEX55					•		
SPEX65						•	
SPEX75						•	
SPEX95							•
SPEX3208		•					
SPEX4208				•			
SPEX8208						•	
SPEX3277		•					
SPEX4277				•			
SPEX60						•	
SPEX80						•	
SPEX90						•	
SPEX100							•

***Special suffixed models (i.e. CA, etc.), will have identical temperature rises as their base model**

For optimum performance, Eemax recommends the use of isolation valves (full flow ball type) on the inlet and outlet pipes.

⚠WARNING ***BEFORE ATTEMPTING ANY INSTALLATION, MODIFICATION OR SERVICE OF THIS HEATER, MAKE SURE THE ELECTRICAL POWER IS DISCONNECTED.***

1. The heater's water INLET and OUTLET are labeled. Install full flow ball valves to the inlet and outlet pipes and run water through the inlet pipe into a bucket to purge it of any debris. Close the inlet ball valve.



2. Make sure the inlet filter screen is present in the inlet fitting and the inlet and outlet pipes are correctly aligned with the heater connections to minimize stress on the heater.

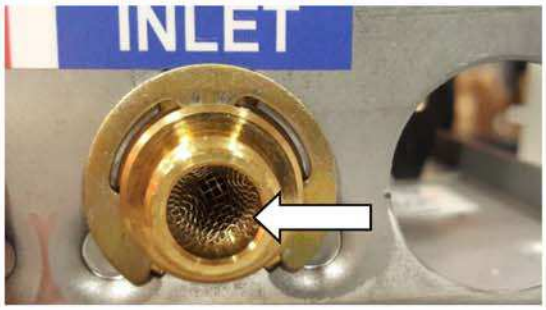

3. Remove the cover. Connect the pre-assembled inlet and outlet pipes to the heater **(do not overtighten compression fittings)** and fully open the inlet and outlet ball valves. Check the system for water leaks at all plumbing connections. If a leak is present at the compression fitting, **slowly** tighten compression nut until it stops – **do not overtighten**.

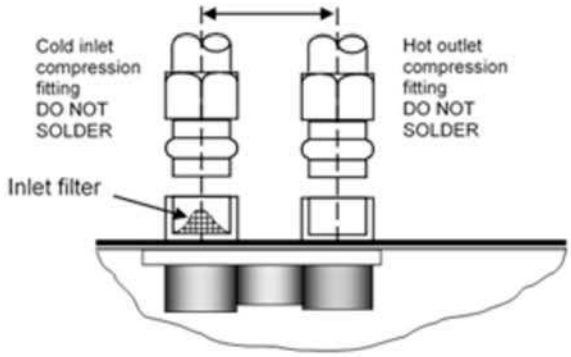

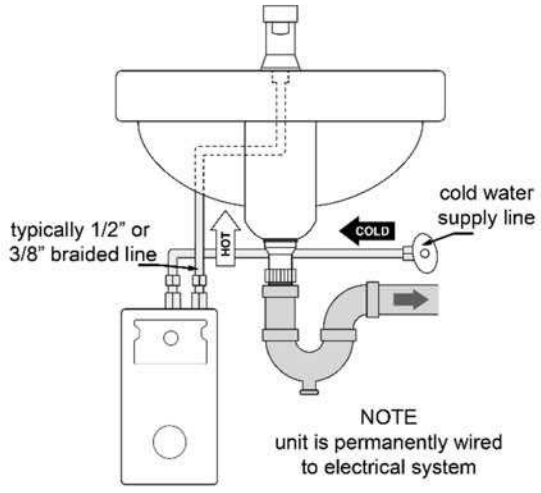

4. Open the hot water faucet and run water for a minimum of 60 seconds and until the flow is continuous and free of air pockets. Close the faucet and install the aerator (if supplied).

Failure to install aerator will result in less-than-favorable heater performance.





3) ELECTRICAL HOOK-UP

⚠WARNING ***BEFORE BEGINNING ANY WORK ON THIS INSTALLATION, CONFIRM THE ELECTRICAL BREAKER IS "OFF" AND THAT ALL MOUNTING AND PLUMBING WORK HAS BEEN COMPLETED PER THE STATED INSTRUCTIONS.***

For use on an individual branch circuit only.

The heater shall be installed using insulated, UL listed, 2 wire cable (2 wire plus ground) of the appropriate size suitable for up to 75°C and protected by the correctly rated circuit breaker. Refer to the chart below for recommended copper wiring for conductors with a temperature rating of 75°C:

ELECTRICAL SPECIFICATIONS

Base Model*	Voltage (VAC)	Max power (kW)	Max current (A)	Minimum wire size (AWG) @75°C
SPEX1812	120	1.8	15	14
SPEX2412	120	2.4	20	14
SPEX3012	120	3	25	12
SPEX3512	120	3.5	29	10
SPEX35	240	3.5	15	14
SPEX48	240	4.8	20	14
SPEX55	240	5.5	23	12
SPEX65	240	6.5	27	10
SPEX75	240	7.5	32	10
SPEX95	240	9.5	40	8
SPEX3208	208	3	15	14
SPEX4208	208	4.1	20	14
SPEX8208	208	8.3	40	8
SPEX3277	277	3	11	14
SPEX4277	277	4.1	14.8	14
SPEX60	277	6	22	12
SPEX80	277	8	29	10
SPEX90	277	9	33	10
SPEX100	277	10	36	8

***Special suffixed models (i.e. CA, etc.), will have identical temperature rises as their base model**

1. Power cable entry to the heater should be made through one of the knock-out holes located on the back plate or top/bottom ends of the unit. Use the appropriate strain relief fitting.





2. The power leads are to be secured to the L1 and L2 or L and N connectors on the terminal block or relay. The ground lead is to be secured to the GND connector on the block or the green ground wire with the provided wire nut.

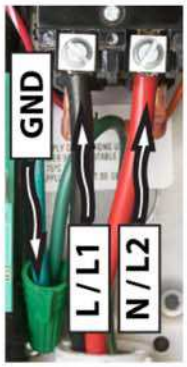



⚠WARNING ***FAILURE TO GROUND THE SYSTEM MAY RESULT IN SERIOUS INJURY, DEATH AND/OR PROPERTY DAMAGE.***

3. Leave the breaker in the "OFF" position. Proceed to the next section:
COMMISSIONING THE HEATER



4) COMMISSIONING THE HEATER

⚠CAUTION ***BEFORE SWITCHING THE ELECTRICAL BREAKER "ON", VERIFY THE INLET AND OUTLET BALL VALVES ARE FULLY OPEN AND WATER IS FLOWING THROUGH THE HOT WATER FAUCET FOR A MINUTE OR TWO UNTIL THE FLOW IS CONTINUOUS AND FREE FROM AIR POCKETS. DO NOT SWITCH THE BREAKER "ON" IF THERE IS A POSSIBILITY THE WATER IN THE HEATER IS FROZEN.***

1. Verify water is flowing through the faucet.	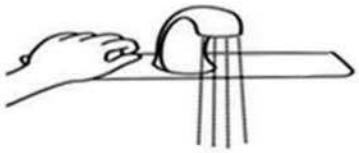
2. Switch "ON" the electric power supply at the breaker.	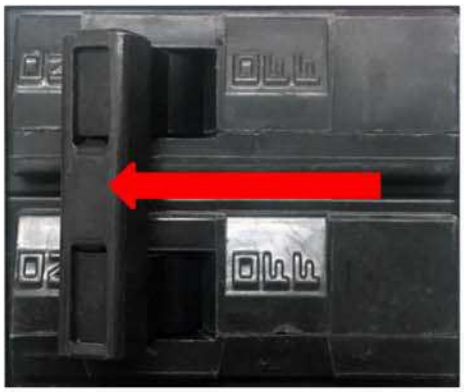
3. The InfoCue™ will flash rapidly while water flows through the unit. Maintain flow.	
4. After 15 seconds, the InfoCue will turn solid red and there will be an audible click. **The heater is commissioned at this point.** The faucet can be turned off and used as needed. With no flow, the unit will flash every 4 seconds, indicating normal stand-by mode.	

Congratulations!

Your Eemax tankless electric water heater is installed and ready for use!

MAXIMUM TEMPERATURE RISE AT SPECIFIED FLOW RATE, °F (°C)

Base Model*	GPM (LPM)								
	0.2 (0.76)	**0.25 (0.95)**	**0.3 (1.14)**	**0.4 (1.51)**	**0.5 (1.89)**	**0.7 (2.65)**	**0.8 (3.03)**	**1.0 (3.79)**	**1.5 (5.68)**
SPEX1812	61 (34)	49 (27)	41 (23)	31 (17)	25 (14)	18 (10)	15 (8)	12 (7)	8 (4)
SPEX2412	82 (46)	66 (37)	55 (31)	41 (23)	33 (18)	23 (13)	20 (11)	16 (9)	11 (6)
SPEX3012	-	82 (46)	68 (38)	51 (28)	41 (23)	29 (16)	26 (14)	20 (11)	14 (8)
SPEX3512	-	-	80 (44)	60 (33)	48 (27)	34 (19)	30 (17)	24 (13)	16 (9)
SPEX35	-	-	80 (44)	60 (33)	48 (27)	34 (19)	30 (17)	24 (13)	16 (9)
SPEX48	-	-	-	82 (46)	66 (37)	47 (26)	41 (23)	33 (18)	22 (12)
SPEX55	-	-	-	-	75 (42)	54 (30)	47 (26)	38 (21)	25 (14)
SPEX65	-	-	-	-	-	63 (35)	55 (31)	44 (24)	30 (17)
SPEX75	-	-	-	-	-	73 (41)	64 (36)	51 (28)	34 (19)
SPEX95	-	-	-	-	-	-	81 (45)	65 (36)	43 (24)
SPEX3208	-	82 (46)	68 (38)	51 (28)	41 (23)	29 (16)	26 (14)	20 (11)	14 (8)
SPEX4208	-	-	-	70 (39)	56 (31)	40 (22)	35 (19)	28 (16)	19 (11)
SPEX8208	-	-	-	-	-	81 (45)	71 (39)	57 (32)	38 (21)
SPEX3277	-	82 (46)	68 (38)	51 (28)	41 (23)	29 (16)	26 (14)	20 (11)	14 (8)
SPEX4277	-	-	-	70 (39)	56 (31)	40 (22)	35 (19)	28 (16)	19 (11)
SPEX60	-	-	-	-	82 (46)	59 (33)	51 (28)	41 (23)	27 (15)
SPEX80	-	-	-	-	-	78 (43)	68 (38)	55 (31)	36 (20)
SPEX90	-	-	-	-	-	-	77 (43)	61 (34)	41 (23)
SPEX100	-	-	-	-	-	-	-	68 (38)	46 (26)

**Special suffixed models (i.e. CA, etc.), will have identical temperature rises as their base model*

"-"Flow rate below turn on flow for this model

Note: The values shown above are only for comparison purposes.

MAXIMUM DERATED TEMPERATURE RISE AT SPECIFIED FLOW RATE, °F (°C)

Base Model*	240VAC heaters used at 208VAC GPM (LPM)								
	0.2 (0.76)	**0.25 (0.95)**	**0.3 (1.14)**	**0.4 (1.51)**	**0.5 (1.89)**	**0.7 (2.65)**	**0.8 (3.03)**	**1.0 (3.79)**	**1.5 (5.68)**
SPEX35	-	-	60 (33)	45 (25)	36 (20)	26 (14)	22 (12)	18 (10)	12 (7)
SPEX48	-	-	-	61 (34)	49 (27)	35 (19)	31 (17)	25 (14)	16 (9)
SPEX55	-	-	-	-	56 (31)	40 (22)	35 (19)	28 (16)	19 (11)
SPEX65	-	-	-	-	-	48 (27)	42 (23)	33 (18)	22 (12)
SPEX75	-	-	-	-	-	55 (31)	48 (27)	38 (21)	26 (14)
SPEX95	-	-	-	-	-	-	61 (34)	49 (27)	32 (18)

**Special suffixed models (i.e. CA, etc.), will have identical temperature rises as their base model*

"-"Flow rate below turn on flow for this model

Note: The values shown above are only for comparison purposes.

5) TROUBLESHOOTING

CAUTION: Make certain power to unit is "OFF" before removing protective cover FOR ANY REASON.

For status resolution, please consult the table below.

LED Pattern	Status/Problem	Possible causes	Heater response	Possible solutions
Solid light	Heating	N/A	N/A	N/A
One flash every four seconds	Idle	N/A	- unit waits for flow	N/A
Two flashes once, three second pause	Low heat	- outlet temperature below 90°F/32°C for 5 seconds of flow - element failure - ECO tripped/malfunctioning - relay/contactor malfunctioning - control board failure - inlet water supply out of spec	- unit keeps running, LED flashes a warning pattern	- reduce flow through unit
Two flashes twice, three second pause	Outlet thermistor failure	- outlet thermistor interrupted or disconnected	- unit keeps running, LED flashes a warning pattern	- inspect connections/wiring of outlet thermistor
Two flashes three times, three second pause	Over-temperature Warning	- outlet temperature exceeds 110°F/38°C	- unit keeps running, LED flashes a warning pattern	-increase flow through unit. If this temperature is desired no action is required
Three flashes once, three second pause	Over-temperature Protection	- outlet temperature exceeds 150°F/65°C	- unit stops heating until outlet temperature falls below preset minimum	- increase flow through unit to decrease the overall temperature rise
Three flashes twice, three second pause	Freeze warning	- inlet temperature is too low (below 35°F/2°C)	- unit shuts down*	- increase temperature of inlet water to meet product specifications

Notes:
* "shut down" means the control board stops applying heat to the heating element, but the control board and diagnostic functions remain active

Still having trouble? Please call our Technical Service Department.

6) PERIODIC MAINTENANCE

The heater is designed for many years of carefree use. In order to maintain consistent water flow, it may be necessary to periodically clean the faucet aerator or the filter screen located in the brass inlet fitting at the heater.

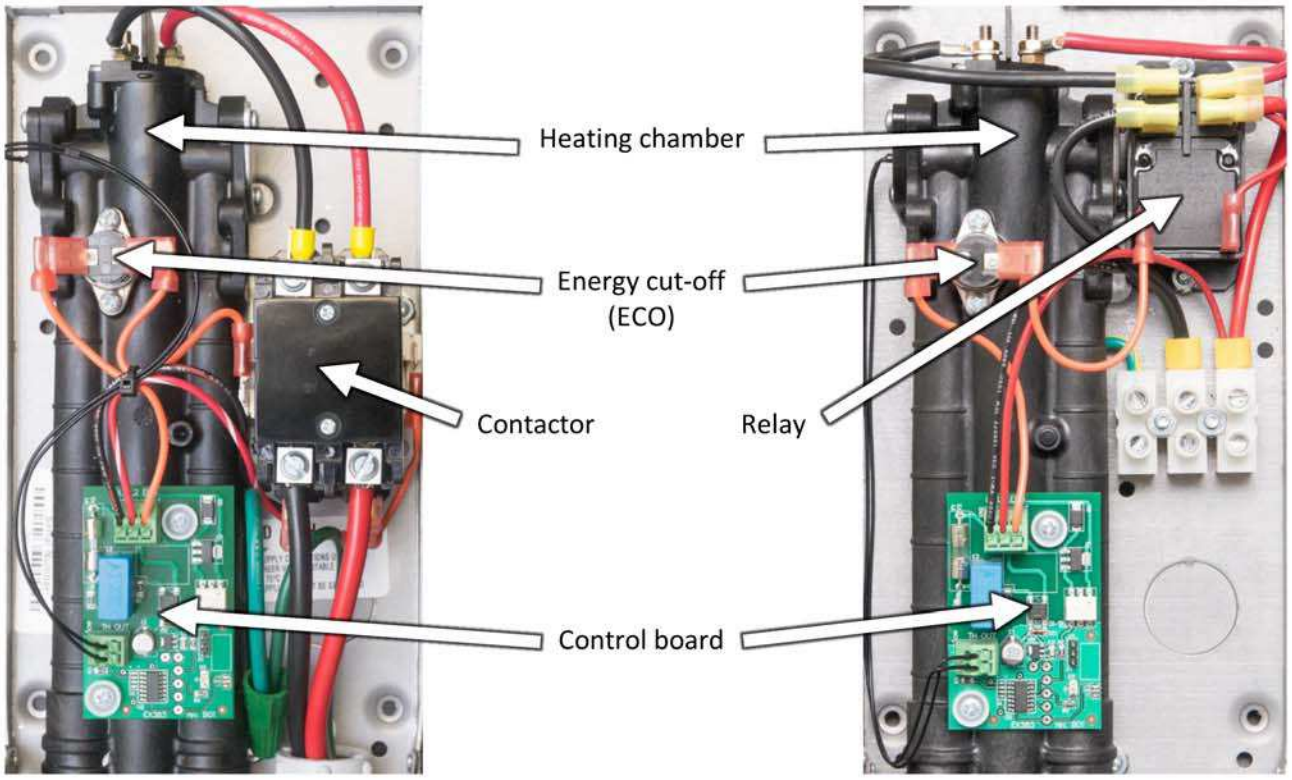

Element cartridge *installs inside heating chamber*	

7) REPLACEMENT PART NUMBERS

COMPRESSION FITTINGS

3/8" NUT	EX68B
3/8" SLEEVE	EX68C

8) REPAIR PARTS FOR FLOWCO UNITS

Base Model	Element Cartridge	Control Board	Relay
SPEX1812	EX800 PRT	EX383	EX250B
SPEX2412	EX610	EX383	EX250B
SPEX3012	EX480	EX383	EX250B
SPEX3512	EX410	EX383	EX250B
SPEX35	EX1650	EX383	EX254
SPEX48	EX1200	EX383	EX254
SPEX55	EX1050	EX383	EX254
SPEX65	EX890	EX383	EX254
SPEX75	EX770	EX383	EX255B
SPEX95	EX630	EX383	EX255B
SPEX3208	EX1440	EX383	EX254B
SPEX4208	EX1050	EX383	EX254B
SPEX8208	EX520	EX383	EX255B
SPEX3277	EX260	EX383	EX251B
SPEX4277	EX1870	EX383	EX251B
SPEX60	EX1280	EX383	EX251B
SPEX80	EX960	EX383	EX251B
SPEX90	EX850	EX383	EX253B
SPEX100	EX760	EX383	EX253B

If you need any assistance from our Technical Service Department, make sure you can identify this water heater by having the model no:_____ and serial number:_____.

Call 203-267-7890 or toll free: 800-543-6163.

Eemax Inc., 400 Captain Neville Drive, Waterbury, CT 06705

Tel: 800-543-6163, 203-267-7890, Fax: 203-267-7975, email: support@eemaxinc.com

Notes: