D225018
Vaughn® Single Handle Lavatory Faucet

SPECIFICATIONS

Features/Benefits

- 1.2 gpm (4.5 L/min) Max Flow @ 60 psi with Laminar Water Stream
- Alternative Flow Rates Available with Spray Water Stream
  - 1.0 gpm (3.8 L/min) When Used with DA613074N Aerator
  - 0.5 gpm (1.9 L/min) When Used with DA613075N Aerator
- 4 1/8" Spout Height, 5 1/16" Spout Reach
- Ceramic Disc Cartridge
- Includes Metal Pop-Up Drain Assembly
- Single Hole Mount
- Optional Deck Plate, DA667229, Sold Separately
- Optional Temperature Indicator Included

Available Color/Finishes

Color	Description
	Chrome

Please see danze.com or current price list for available finishes.
Finish is defined by additional suffix.

Mount Type

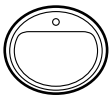

Standards & Certifications

NSF/ANSI 372

WaterSense Meets EPA Criteria

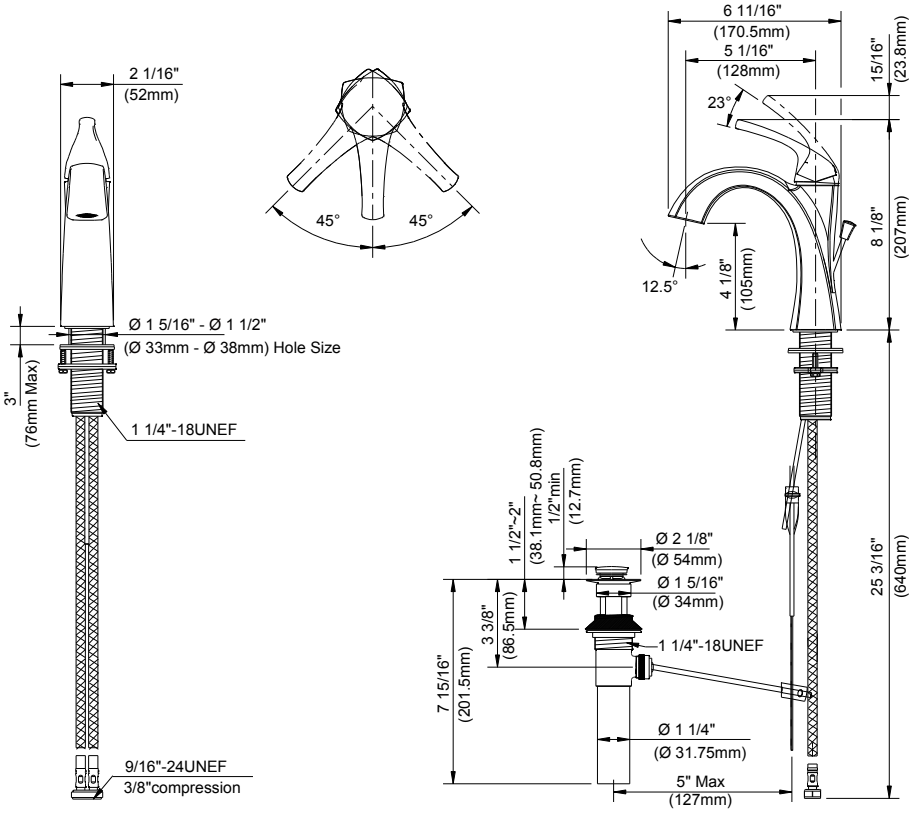

Submittal Information:

Name: _____ Contractor: _____

Location: _____ Contact #: _____

WARRANTY: Danze products are covered by a manufacturer's lifetime limited warranty for manufacturing defects.

Danze, Inc., 2500 Internationale Parkway, Woodridge, IL 60517, USA www.danze.com