SUBMITTAL DATA SHEET

No-Lead
Icemaker Quarter Turn Supply Stops - 72080EXPI

Expansion Pex x Comp

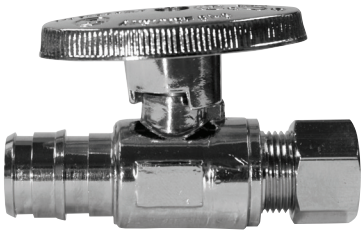

A.Y. McDonald Mfg. Co. No-Lead Quarter Turn Supply Stops are compact, so they are easy to use in tight spaces. The ball valve design allows for ease of operation and positive shutoff, and is ideal for residential and commercial applications. They are designed to shut off the flow of water, without having to turn off the water to the entire house.

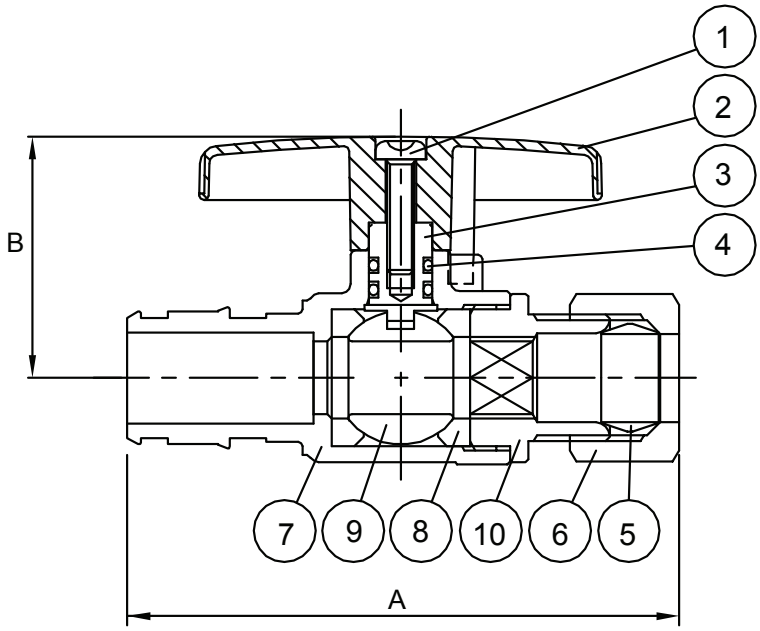

Dimensions

Size	A	B
1/2" x 1/4"	2.36"	1.06"

Materials

No.	Part	Material
1	Handle Screw	Steel
2	Handle	Zinc Alloy
3	Stem	No-Lead Brass
4	O-ring	Rubber
5	Compression Ring	Brass
6	Compression Nut	Brass
7	Body	No-Lead Brass
8	Ball Disc Packing	EPDM
9	Ball Disc	No-Lead Brass
10	End Plug	No-Lead Brass

SUBMITTAL INFORMATION

- Handle removes easily to help protect against accidental operation, during rough-ins
- Chrome plated body
- Pex end conforms to ASTM F1960
- NSF/ANSI 61 & NSF/ANSI 372

NO-LEAD: The weighted average of the wetted surface of this no-lead product contacted by consumable water contains less than one quarter of one percent (0.25%) lead.

A.Y. McDonald Mfg. Co.
4800 Chavenelle Rd
Dubuque, IA 52002

Toll Free: 1-800-292-2737
sales@aymcdonald.com
aymcdonald.com

A.Y. McDonald considers the information on this assembly drawing correct when published. Item and option availability, including specifications, are subject to change without notice.

Submitted by: