Building connections that last™

ASC Engineered Solutions

S1 QVA

Seal Welded Stainless Steel Ball Valve Datasheet



QUADRANT
An ASC Engineered Solution

Seal Welded Stainless Steel Ball Valve

S1 QVA

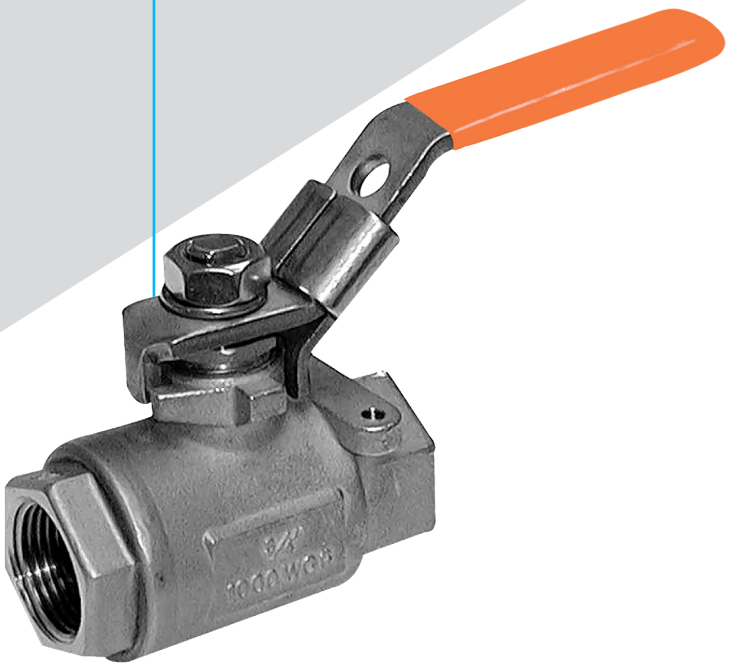

Features

- One Piece – Seal Welded Construction
- All sizes are Full Port
- 1000 WOG Rating
- 150 PSIG Saturated Steam Rating
- All Models are NACE MR-01-75 Compliant
- CF8M Bodies and Tailpieces, 316 Stainless Steel Internals
- Standard Actuator Mounting Pads on all Sizes
- Standard Stainless Steel Locking Handles
- Locking Oval Handles Available in Stainless Steel
- The Ultimate in Safe Design!

Ratings

1000 PSIG @100°F Water, Oil, Gas

150 PSIG Saturated Steam

Materials of Construction

Part	Description	Standard Material	Optional Material(s)
1	Body	ASTM A351 Gr. CF8M	
2	Tailpiece	ASTM A351 Gr. CF8M	
3	Ball	ASTM A276 Gr. 316	
4	Stem	ASTM A276 Gr. 316	
5	Packing Nut	ASTM A276 Gr. 316	
6	Seats (2)	R-PTFE	Steam Seats
7	Packing	R-PTFE	Graphite
8	Thrust Washer (2)	R-PTFE	
9	Handle Assy	Stainless Steel w/Vinyl	Stainless Locking Oval
10	Handle Nut	Stainless Steel	

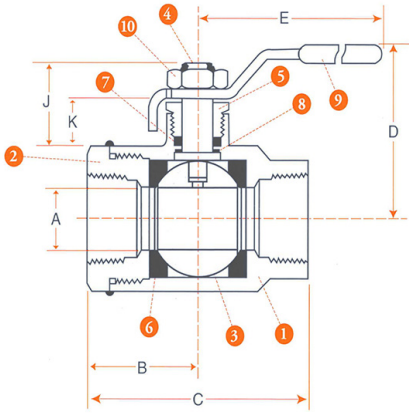

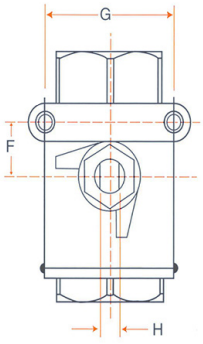

QUADRANT
An ASC Engineered Solution

Seal Welded Stainless Steel Ball Valve

S1 QVA

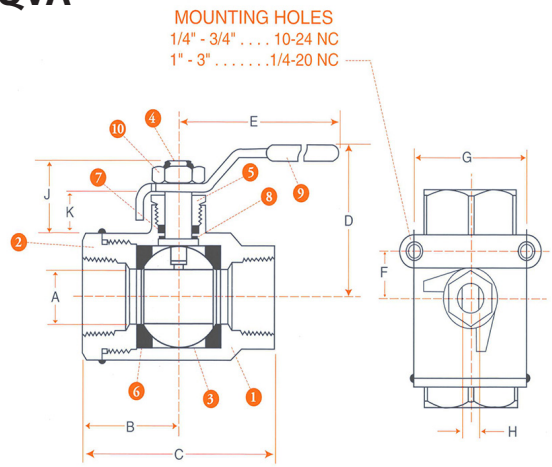

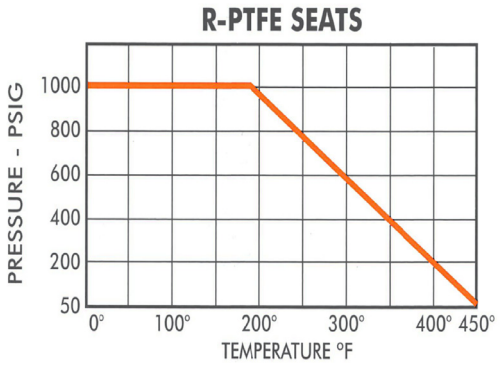

Dimensions, Weights, Cv Factors & Maximum Operating Torque

Size	A	B	C	D	E	F	G	H	J	K	Weight Lbs.	CV	Max Torque
¼-⅜"	0.43	1.1	2.2	2.2	4.2	0.5	1.12	0.2	0.82	0.49	0.58	10	60 IN-LB
½"	0.56	1.3	2.6	2.3	4.3	0.5	0.5	1.38	0.20	0.98	0.75	16	60 IN-LB
¾"	0.81	1.5	3.0	2.8	5.8	0.87	1.38	0.28	1.32	0.71	1.47	32	120 IN-LB
1"	1.0	1.7	3.5	3.0	5.8	0.87	1.5	0.28	1.32	0.71	2.33	62	160 IN-LB
1-¼"	1.25	2.0	4.0	3.6	7.5	0.93	1.5	0.35	1.44	0.81	3.47	115	180 IN-LB
1-½"	1.5	2.2	4.4	3.9	7.5	0.93	1.5	0.35	1.46	0.81	5.35	140	260 IN-LB
2"	2.0	2.5	5.0	4.3	8.1	1.0	1.5	0.35	1.46	0.82	7.99	365	400 IN-LB
2-½"	2.5	3.3	6.6	5.0	10	1.37	2.75	0.39	1.87	0.94	15.1	450	500 IN-LB
3"	3.0	3.6	7.2	5.4	10	1.37	2.75	0.39	1.80	0.85	22.1	1100	800 IN-LB

Numbering System How to order S1 QVA

S1	F	S	S	R	R	SL	TT	100
Series	Port Size	Body Material	Ball/Stem Material	Seat Material	Seal Material	Handle Type	Ends	Size
S1 Seal Welded 1000WOG Full Port	F Full	S Stainless (CF8M)	S 316 Stainless	R R-PTFE	R R-PTFE	SL Stainless Latch Lock	TT FNPT	025 ¼"
				Z Steam Seats	G Graphite	SO Stainless Oval		038 ⅜"
						LO Stainless Locking Oval		050 ½"
						PA Double Acting Pneumatic		075 ¾"
						SA Spring Return Pneumatic		100 1"
								125 1 - ¼"
								150 1 - ½"
								200 2"

About ASC Engineered Solutions

ASC Engineered Solutions is defined by quality—in its products, services and support. With more than 1,400 employees, the company's portfolio of precision-engineered piping support, valves and connections provides products to more than 4,000 customers across industries, such as mechanical, industrial, fire protection, oil and gas, and commercial and residential construction. Its portfolio of leading brands includes ABZ Valve®, AFCON®, Anvil®, Anvil EPS, Anvil Services, Basic-PSA, Beck®, Catawissa, Cooplet®, FlexHead®, FPPI®, Gruvlok®, J.B. Smith, Merit®, North Alabama Pipe, Quadrant®, SCI®, Sharpe®, SlideLOK®, SPF® and SprinkFLEX®. With headquarters in Commerce, CA, and Exeter, NH, ASC also has ISO 9001:2015 certified production facilities in PA, TN, IL, TX, AL, LA, KS, and RI.

asc-es.com

Building connections that last™

ASC™ Engineered Solutions

FC-DS-S1 QVA-v01 20210520