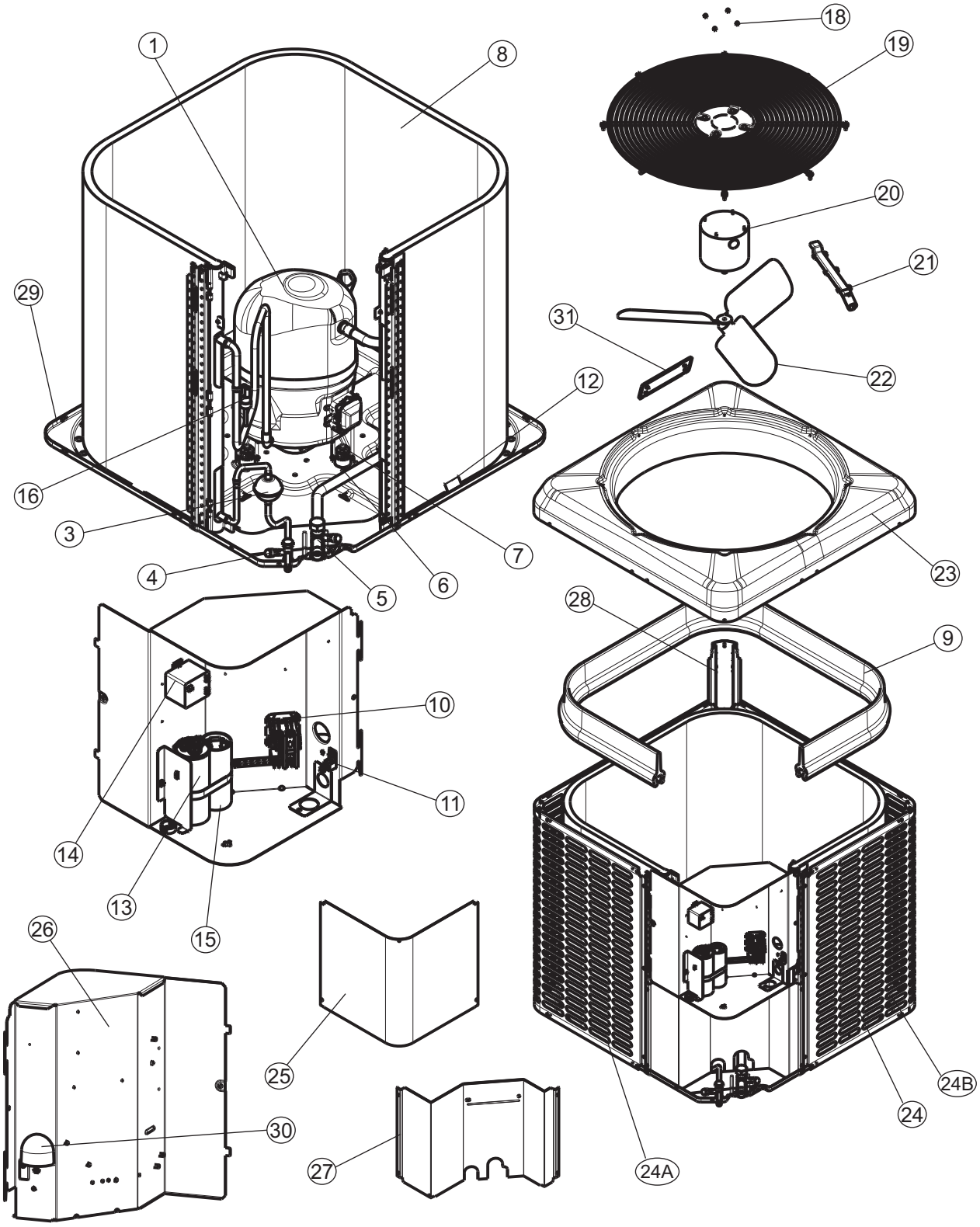
1
8
18
19
20
21
29
31
22
12
16
3
7
23
4
5
6
28
9
10
11
14
13
15
26
25
24B
24
30
27
24A

ITEM	DESCRIPTION	TC4B1821HA	TC4B2421HA	TC4B3021HA	TC4B3621HA	
1	Compressor	S1-01504785001	S1-01504781001	S1-01504782001	S1-01504783001	
2*	Blanket, Compressor Sound	---	---	---	---	
3	Filter Drier	S1-02647795000	S1-02647795000	S1-02647795000	S1-02647795000	
4	Base Valve (3/8") (Liquid)	S1-02322459000	S1-02322459000	S1-02322459000	S1-02322459000	
5	Base Valve (3/4") (Suction)	S1-02322460000	S1-02322460000	S1-02322460000	S1-02322460000	
6	Compressor Mount (Pkg. of 4)	S1-02809519000	S1-02809519000	S1-02809519000	S1-02809519000	
7	Bolt, Compressor (4 Req'd)	S1-02131417000	S1-02131417000	S1-02131417000	S1-02131417000	
8	Outdoor Coil Assembly	S1-37339413001	S1-37339413002	S1-37339413002	S1-37339413003	
9	Molded Foam, Outdoor Coil	S1-02817066000	S1-02817069000	S1-02817069000	S1-02817069000	
10	Contactor (30 amp)	S1-02427531000	S1-02427531000	S1-02427531000	S1-02427531000	
11	Lug, Ground	S1-02521798000	S1-02521798000	S1-02521798000	S1-02521798000	
12	Mount, Coil (6 Req'd)	S1-02817063000	S1-02817063000	S1-02817063000	S1-02817063000	
13	Dual Capacitor (30/5 MFD)	S1-02424778700	---	---	---	
	Dual Capacitor (35/5 MFD)	---	S1-02425859700	---	---	
	Dual Capacitor (40/5 MFD)	---	---	S1-02425894700	---	
	Dual Capacitor (45/5 MFD)	---	---	---	S1-02425120700	
14	Relay, Start	S1-02425923700	S1-02425923700	S1-02425060000	S1-02425035000	
15	Capacitor, Start	S1-02431993000	S1-02431993000	S1-02431993000	S1-02425076700	
16	Switch, Pressure (High)	S1-02546848000	S1-02546848000	S1-02546848000	S1-02546848000	
17*	Mount, Stand-off, Coil Guard (2 Req'd)	S1-02817062000	S1-02817062000	S1-02817062000	S1-02817062000	
18	Kit, Motor Mounting (Acorn Nuts)	S1-36390117700	S1-36390117700	S1-36390117700	S1-36390117700	
19	Guard, Fan	S1-02647768000	S1-02647769000	S1-02647769000	S1-02647769000	
20	Motor, Fan	S1-02436271000	S1-02436228000	S1-02436228000	S1-02436227000	
21	Wireway	S1-02816467000	S1-02816468000	S1-02816468000	S1-02816468000	
22	Blade, Fan	S1-02642444000	S1-32634097000	S1-32634097000	S1-02634593000	
23	Top	S1-07339395002	S1-07339395005	S1-07339395005	S1-07339395005	
24	Panel, Coil Guard (2 Req'd)	S1-07339398002	S1-07339398004	S1-07339398004	S1-07339398006	
25	Cover, Control Box	S1-07339400002	S1-07339400005	S1-07339400005	S1-07339400005	
26	Box, Control	S1-07339396001	S1-0739486001	S1-0739486001	S1-0739486001	<
27	Panel, Block-Off	S1-07339399010	S1-07339399003	S1-07339399003	S1-07339399012	
28	Post, Corner	S1-07339401005	S1-07339401009	S1-07339401009	S1-07339401007	
29	Pan, Base	S1-07339397001	S1-07339397002	S1-07339397002	S1-07339397002	
30	Gasket, Rain Hood	S1-02817106000	S1-02817106000	S1-02817106000	S1-02817106000	
31*	Badge, Branding	Consult your Source 1 Acct. Rep.				
32*	Harness, Wire, AC	S1-02547245000	S1-02547245000	S1-02547245000	S1-02547245000	
33*	Harness, Wire, Start Component	S1-02547246000	S1-02547246000	S1-02547246000	S1-02547246000	
34*	Harness, Wiring (6 Pin)	---	---	---	---	
35*	Harness, Compressor	S1-02531884000	S1-02531884000	S1-02531884000	S1-02531884000	
36*	Wiring Diagram	1183564	1183564	1183564	1183564	

NOTE: *Not Shown
New replacement parts shown in **bold** face type at the first printing of parts list dated 12/17.
Major components and suggested stocking items are shown with shaded item number.
"<" Across from row indicates a change in that row. Changed part numbers are in red.
--- Not applicable to specified model.

ITEM	DESCRIPTION	TC4B4221HA	TC4B4821SA	TC4B6021SA	
1	Compressor	S1-01504784001	S1-01504616004	S1-01504615004	
2*	Blanket, Compressor Sound	S1-01007644000	---	---	
3	Filter Drier	S1-02647795000	S1-02647795000	S1-02647795000	
4	Base Valve (3/8") (Liquid)	S1-02322459000	S1-02322459000	S1-02322459000	
5	Base Valve (7/8") (Suction)	S1-02322461000	S1-02322461000	S1-02322461000	
6	Compressor Mount (Pkg. of 4)	S1-02810505000	S1-02810505000	S1-02810505000	
7	Bolt, Compressor (4 Req'd)	S1-02131417000	S1-02116047000	S1-02116047000	
8	Outdoor Coil Assembly	S1-37339413004	S1-37339413004	S1-37339413005	
9	Molded Foam, Outdoor Coil	S1-02817072000	S1-02817072000	S1-02817075000	
10	Contactor (30 amp)	S1-02427531000	---	---	
	Contactor (40 amp)	---	S1-02425837700	S1-02425837700	
11	Lug, Ground	S1-02521798000	S1-02521798000	S1-02521798000	
12	Mount, Coil (6 Req'd)	S1-02817063000	S1-02817063000	S1-02817063000	
13	Dual Capacitor (45/5 MFD)	S1-02425120700	---	---	
	Dual Capacitor (70/5 MFD)	---	S1-02435844000	S1-02435844000	
14	Relay, Start	S1-02425053000	---	---	
15	Capacitor, Start	S1-02425076700	---	---	
16	Switch, Pressure (High)	S1-02546848000	S1-02546848000	S1-02546848000	
17*	Mount, Stand-off, Coil Guard (2 Req'd)	S1-02817062000	S1-02817062000	S1-02817062000	
18	Kit, Motor Mounting (Acorn Nuts)	S1-36390117700	S1-36390117700	S1-36390117700	
19	Guard, Fan	S1-02647770000	S1-02647770000	S1-02647771000	
20	Motor, Fan	S1-02436227000	S1-02436227000	S1-02436227000	
21	Wireway	S1-02816469000	S1-02816469000	S1-02816470000	
22	Blade, Fan	S1-02631361000	S1-02631361000	S1-02647794000	
23	Top	S1-07339395008	S1-07339395008	S1-07339395011	
24A	Panel, Coil Guard (LH)	S1-07339398010	S1-07339398010	S1-07339398014	
24B	Panel, Coil Guard (RH)	S1-07339398008	S1-07339398008	S1-07339398012	
25	Cover, Control Box	S1-07339400005	S1-07339400005	S1-07339400005	
26	Box, Control	S1-0739486001	S1-0739486001	S1-0739486001	<
27	Panel, Block-Off	S1-07339399011	S1-07339399011	S1-07339399012	
28	Post, Corner	S1-07339401005	S1-07339401005	S1-07339401007	
29	Pan, Base	S1-07339397003	S1-07339397003	S1-07339397004	
30	Gasket, Rain Hood	S1-02817106000	S1-02817106000	S1-02817106000	
31*	Badge, Branding	Consult your Source 1 Acct. Rep.			
32*	Harness, Wire, AC	S1-02547245000	S1-02547245000	S1-02547245000	
33*	Harness, Wire, Start Component	S1-02547246000	---	---	
34*	Harness, Wiring (6 Pin)	---	---	---	
35*	Harness, Compressor	S1-02531884000	S1-02541088000	S1-02541088000	
36*	Wiring Diagram	1183564	1183564	1183564	
37*	Muffler, Discharge	S1-02212983000	---	---	

NOTE: *Not Shown
New replacement parts shown in **bold** face type at the first printing of parts list dated 12/17.
Major components and suggested stocking items are shown with shaded item number.
"<" Across from row indicates a change in that row.. Changed part numbers are in red.
--- Not applicable to specified model.

TO ORDER AUTHORIZED FACTORY REPLACEMENT PARTS - Contact your Source1 HVAC Parts Distributor or visit our website at **www.Source1Parts.com** for a Distributor and Dealer listing.

Subject to change without notice. Published in U.S.A.
Copyright © 2017 by Johnson Controls Inc. All rights reserved.

035-24203-001 Rev. G (1217)
Supersedes: 035-24203-001 Rev. F (0317)

York International Corp.
5005 York Drive
Norman, OK 73069