American Standard

INSTALLATION INSTRUCTIONS

Flash™ Shower Valve Rough With Screwdriver Stops

RU101SS
RU102SS
RU107SS
RU108SS
RU109SS
RU107ESS
RU108ESS

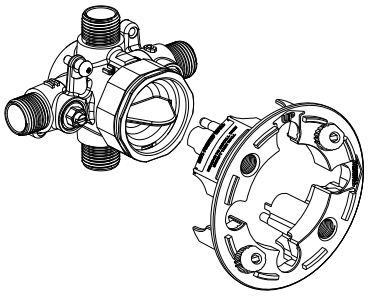

Thank you for selecting American-Standard... the benchmark of fine quality for over 140 years.

To ensure that your installation proceeds smoothly-please read these instructions carefully before you begin.

RECOMMENDED TOOLS

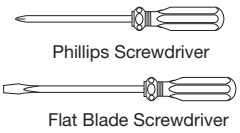

Phillips Screwdriver

Flat Blade Screwdriver

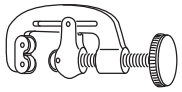

Tubing Cutter



Adjustable Wrench



Channel Locks

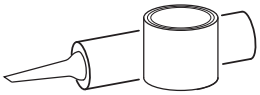

Plumbers' Putty or Caulking

ROUGHING-IN DIMENSIONS

■ To assure proper positioning in relation to wall, note roughing-in dimensions.

RU101SS

INLETS
1/2" NOM. COPPER SWEAT OR 1/2" NPT

OUTLETS
1/2" NOM. COPPER SWEAT OR 1/2" NPT

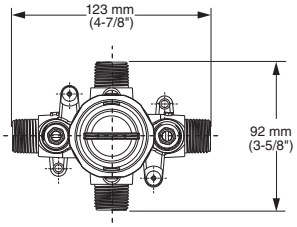

RU109SS

INLETS
1/2" NOM. CPVC

OUTLETS
1/2" NOM. COPPER SWEAT or 1/2" NPT

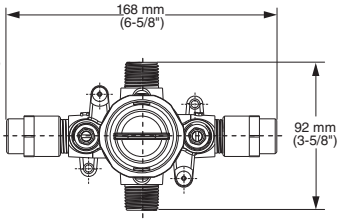

RU102SS

INLETS
1/2" STUB OUT

OUTLETS
1/2" STUB OUT

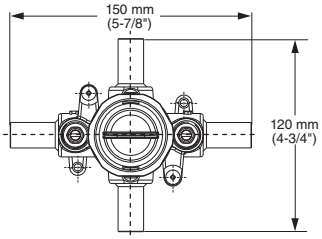

PLASTER GUARD

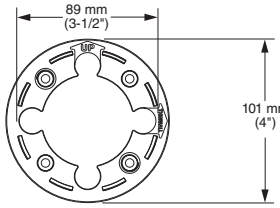

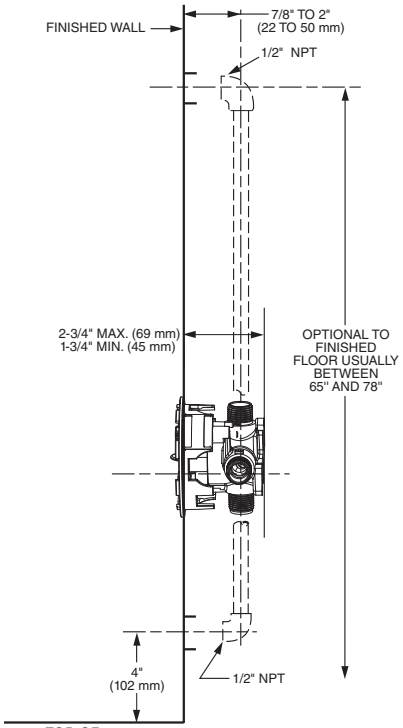

RU107SS

INLETS
1/2" PEX (ASTM F1807-2)

OUTLETS
1/2" NOM. COPPER SWEAT or 1/2" NPT

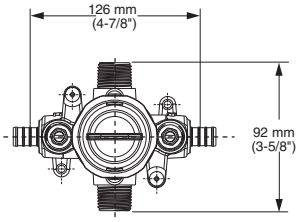

RU107ESS

INLETS
1/2" PEX (ASTM F1807-2)

OUTLETS
1/2" NOM. COPPER SWEAT or 1/2" NPT

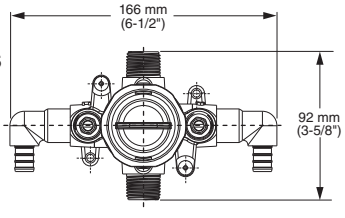

RU108SS

INLETS
1/2" PEX (ASTM F1960)

OUTLETS
1/2" NOM. COPPER SWEAT or 1/2" NPT

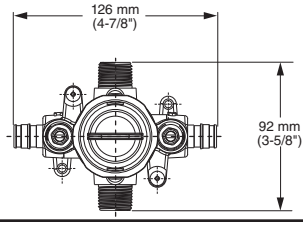

RU108ESS

INLETS
1/2" PEX (ASTM F1960)

OUTLETS
1/2" NOM. COPPER SWEAT or 1/2" NPT

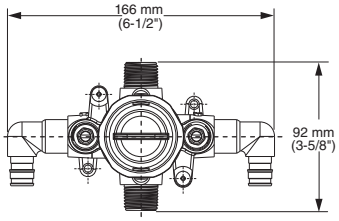

NOTE: TO AVOID SHOWER RISE OR OTHER RELATED ISSUES, **DO NOT** USE ***PEX*** CONNECTIONS ON ANY OF THE OUTLETS.

Product names listed herein are trademarks of AS America, Inc.
© AS America, Inc. 2018

M965907 (5/18)

1 STANDARD WALL INSTALLATION

CAUTION Turn off hot and cold water supplies before beginning.

- See Roughing-in diagram before starting.
- Remove the PLASTER GUARD **(8)** for proper installation.
- Mount VALVE BODY to cross brace (2" X 4") with-in wall. Use wood screws to secure VALVE BODY to brace.
- Connect HOT and COLD water supplies per connection method of selected valve.
- Connect RISER PIPE **(1)** to VALVE BODY **(2)** top outlet marked “UP”.
- Connect TUB FILLER PIPE **(3)** to bottom outlet.
- Cap off shower pipe **(4)** and tub filler pipe **(5)**.
- With TEST CAP **(7)** in place and BONNET NUT **(6)** installed securely, turn on water supplies and check for leaks.
- Remove cap **4** to flush the water through shower pipe.
- Remove cap **5** to flush the water through tub filler pipe.
- Install PLASTER GUARD **(8)** back onto the valve. Only remove PLASTER GUARD **(8)** when ready to install trim Kit.
- Finished wall should allow for a 4" diameter opening (Use PLASTER GUARD for guidance)
- Screw driver stops are primarily used to shut water off. To shut **“HOT”** or **“COLD”** water using a flat head screw driver, turn the head of the screw vertically. And to turn the water back on, turn the screw horizontally.

NOTE: Cross flow can occur, if hot and cold pressures are not equal during testing.
For this situation purchase FLUSH PLUG (M954334) separately. See section 3 for test procedures.

CAUTION: After valve installation, inspect the VALVE BODY for any debris. It can damage Pressure Balance Valve cartridge.

NOTE: For back to back installation, follow steps mentioned above. Reversal of Hot/Cold water supplies is accomplished by rotating cartridge (supplied with trim) 180° during installation.

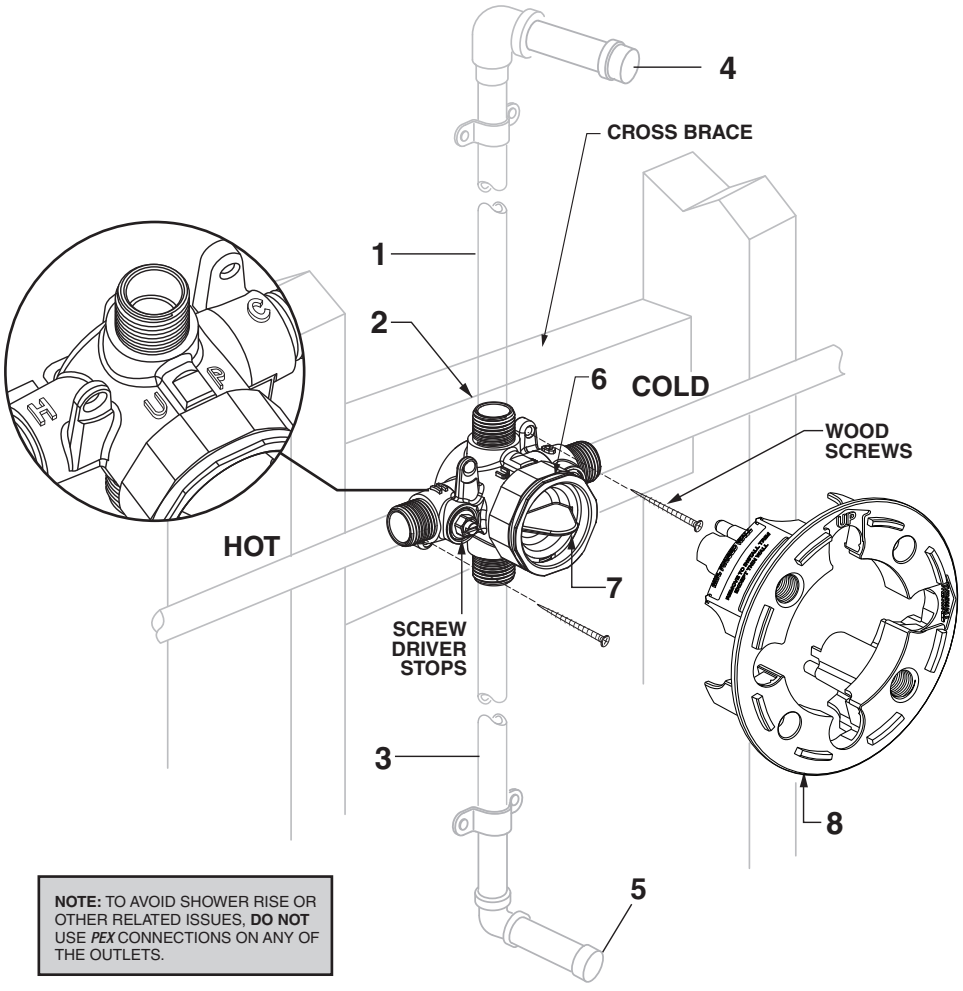

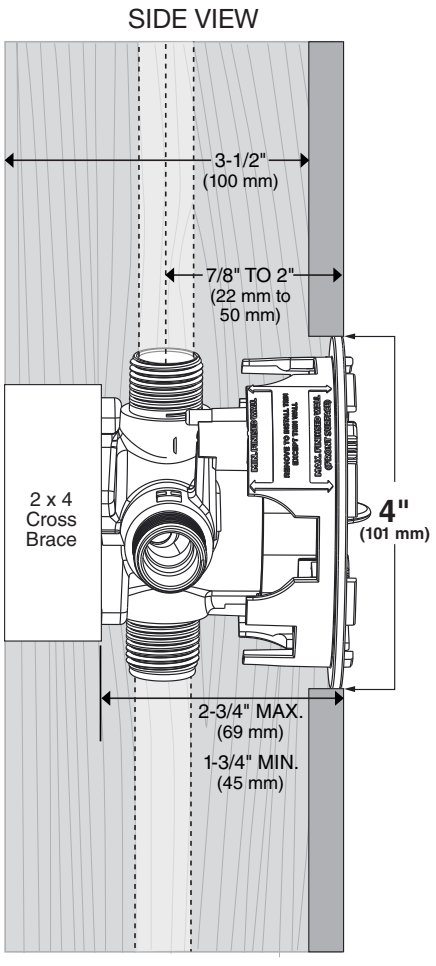

2 THIN WALL INSTALL

CAUTION Turn off hot and cold water supplies before beginning.

- See Roughing-in diagram before starting.
- Finished wall should allow for a 3-1/2" diameter opening (Use PLASTER GUARD for guidance).
- Remove PLASTER GUARD **(8)**, rotate 90˚ counter clockwise and install the two screws. (Thin wall text should be on top)
- Use SELF-CENTERING HOLE GUIDES **(9)** as a guide for thin wall install.
- LOCKING SCREW **(10)** keeps valve in place when installing. Completely Thread LOCKING SCREW **(10)** onto PLASTER GUARD **(8)**.
- During the installation, make sure to position the Locking feature screw as shown in **Figure A** below. Once the valve is positioned on the Thin Wall, turn counterclockwise as shown in **Figure B** to secure VALVE BODY **(2)** in place.
- Connect HOT and COLD water supplies per connection method of selected valve.
- Connect RISER PIPE **(1)** to VALVE BODY **(2)** top outlet marked “UP”.
- Connect TUB FILLER PIPE **(3)** to bottom outlet.
- Cap off shower pipe **(4)** and tub filler pipe **(5)**.
- With TEST CAP **(7)** in place and BONNET NUT **(6)** installed securely, turn on water supplies and check for leaks.
- Remove cap **4** to flush the water through shower pipe.
- Remove cap **5** to flush the water through tub filler pipe.
- Screw driver stops are primarily used to shut water off. To shut **“HOT”** or **“COLD”** water using a flat head screw driver, turn the head of the screw vertically. And to turn the water back on, turn the screw horizontally.

NOTE: Cross flow can occur, if hot and cold pressures are not equal. For this situation purchase FLUSH PLUG (M954334) separately. See section 3 for test procedures.

CAUTION: After valve installation, inspect the VALVE BODY for any debris. It can damage Pressure Balance Valve cartridge.

NOTE: For back to back installation, follow steps mentioned above. Reversal of Hot/Cold water supplies is accomplished by rotating cartridge (supplied with trim) 180° during installation.

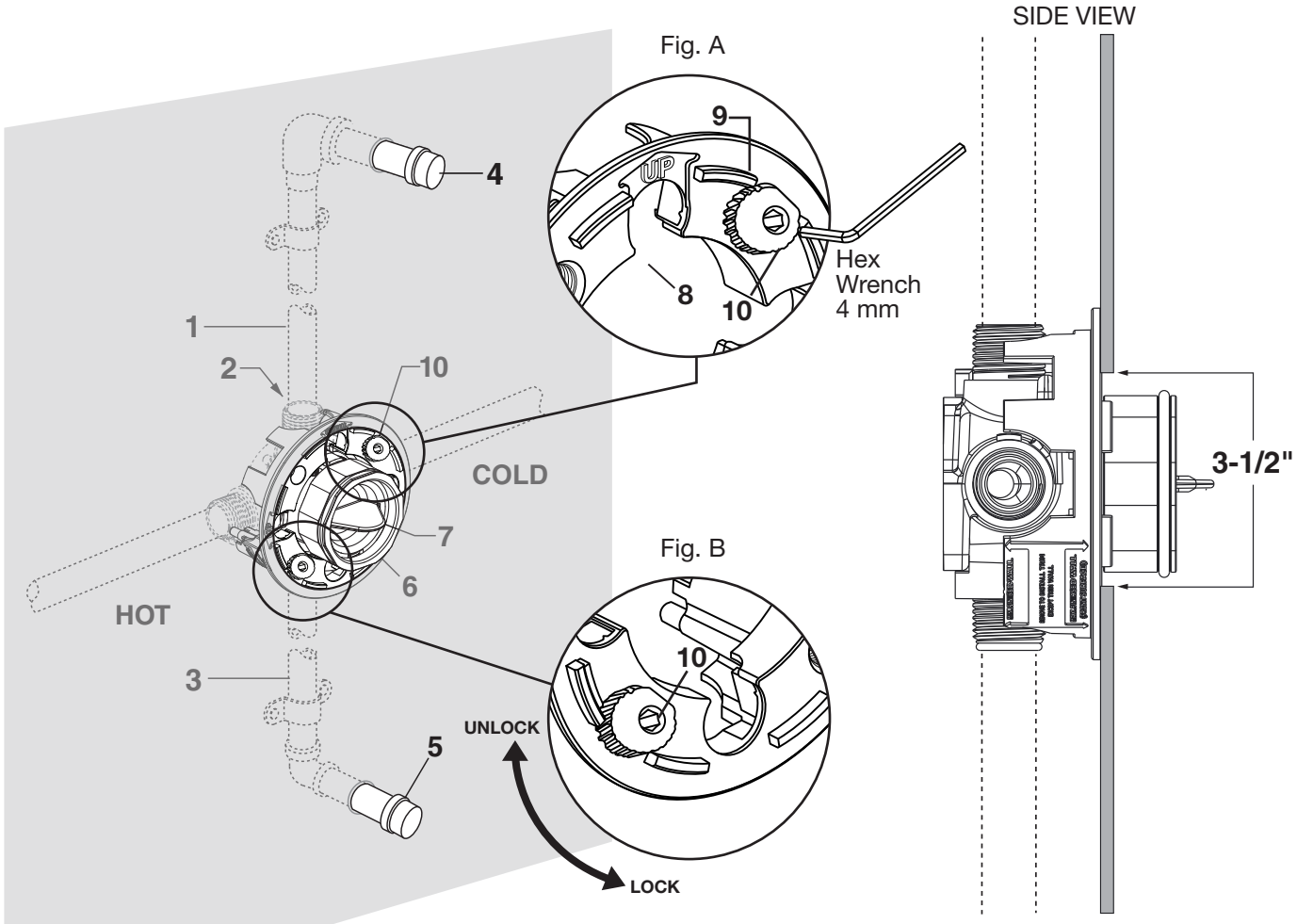

M965907 (5/18)

3 TEST PROCEDURES FOR FLUSH PLUG (SOLD SEPARATELY)

CAUTION **Turn off hot and cold water supplies before beginning.**

- Unthread BONNET NUT **(3)**.
- Remove TEST CAP **(1)** and install FLUSH PLUG **(2)**.
- Rotate FLUSH PLUG **(2)** so opening for inlet (HOT or COLD) directs water flow to selected outlet (SHOWER or TUB).
- Secure FLUSH PLUG **(2)** by tightening BONNET NUT **(3)**.
- Check for leaks and flush lines.
- Repeat steps above to Test/Flush atlernate flow paths.
- Upon completion, unthread BONNET NUT **(3)**. Remove FLUSH PLUG **(2)**, replace with TEST CAP **(1)**, and tighten BONNET NUT **(3)**.

4 SERVICING

- To replace SCREW DRIVER STOP **(4)**, unthread it counterclockwise using the hex wrench.
- Replace the unit with a new SCREW DRIVER STOP **(4)**.

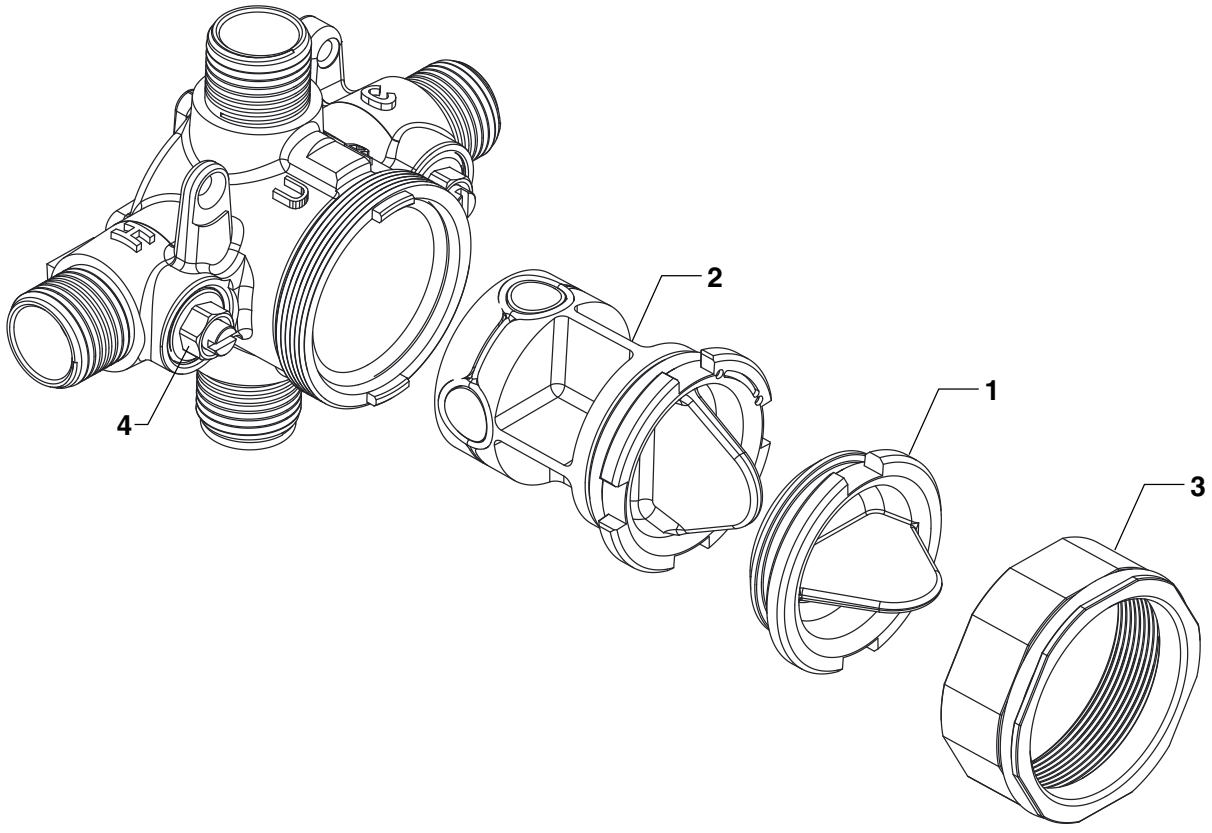

American Standard

Flash™ Shower Valve Rough With Screwdriver Stops

MODEL NUMBERS

RU101SS
RU102SS
RU107SS
RU108SS
RU109SS
RU107ESS
RU108ESS

RU101SS

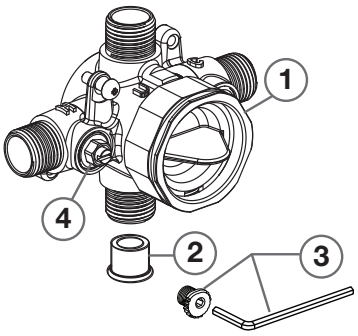

RU107SS

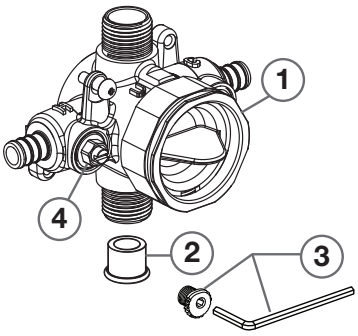

RU108SS

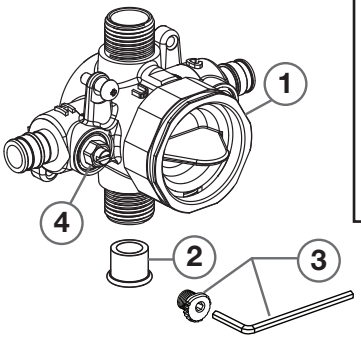

RU109SS

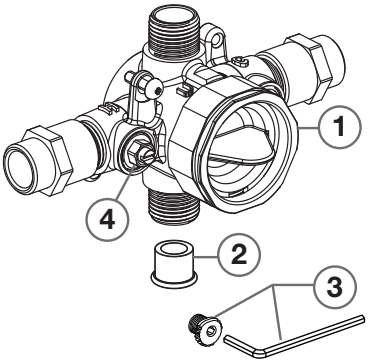

RU107ESS

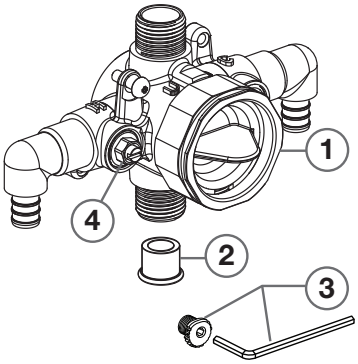

RU108ESS

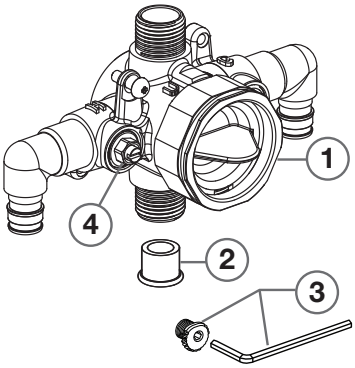

1. **M970452-0070A** FIXATION RING KIT
2. **050145-0070A** 1/2" SWEAT PLUG
3. **M970453-0070A** LOCKING CAM SCREW KIT
4. **M970451-0070A** SCREWDRIVER STOPS

RU102SS

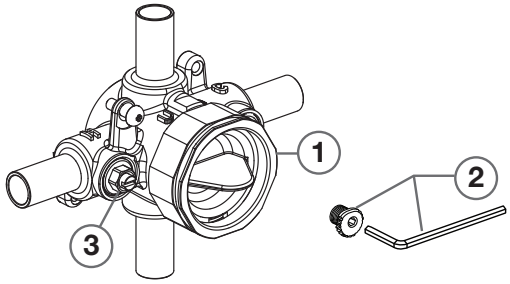

1. **M970452-0070A** FIXATION RING KIT
2. **M970453-0070A** LOCKING CAM SCREW KIT
3. **M970451-0070A** SCREWDRIVER STOPS

PURCHASED SEPARATELY

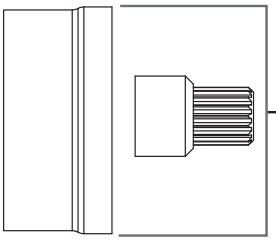

M954805-0070A DEEP ROUGH-IN KIT

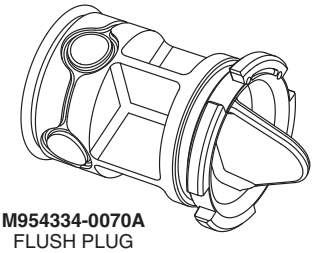

M954334-0070A FLUSH PLUG

HOT LINE FOR HELP
For toll-free information and answers to your questions, call:
1 (800) 442-1902
Mon. - Fri. 8:00 a.m. to 8:00 p.m. EST
Saturday 10:00 a.m. to 4:00 p.m. EST
IN CANADA 1-800-387-0369
(TORONTO 1-905-306-1093)
Weekdays 8:00 a.m. to 7:00 p.m. EST
IN MEXICO 01-800-839-1200



Product names listed herein are trademarks of AS America, Inc.
© AS America, Inc. 2018

PART OF LIXIL

M965907 (5/18)