NOTES:

(N1) 1. FIT / FORM / FUNCTION SHALL FOLLOW PS-E.008.

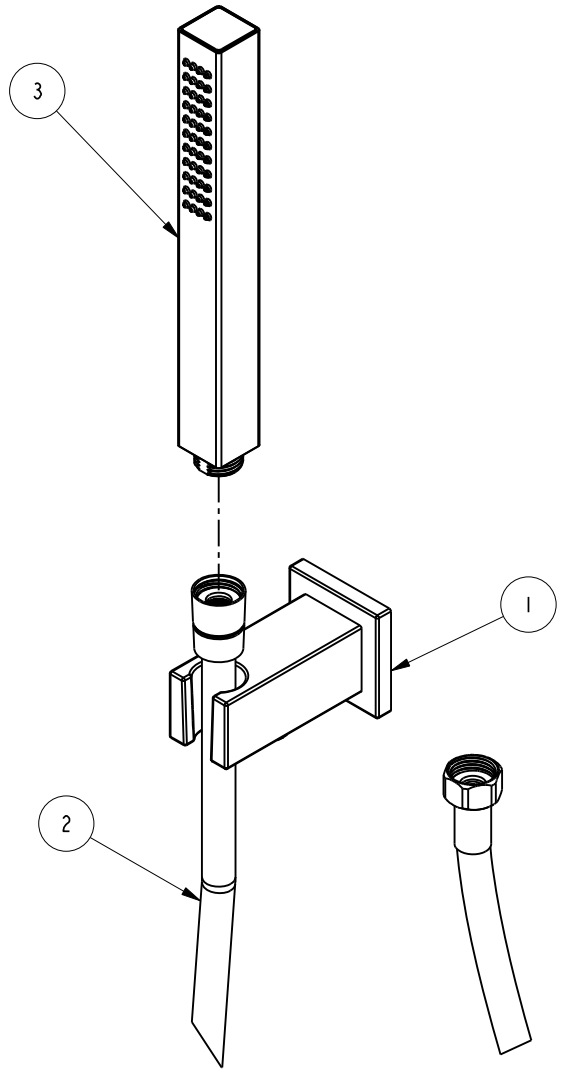

BILL OF MATERIAL (CURRENT LEVEL)

ITEM	PT/ASSY	DESCRIPTION	TYPE	QTY.
1	3-671	SUPPLY ELBOW ASM	ASSEMBLY	1
2	284	59 IN. SPIRAL SHOWER HOSE	ASSEMBLY	1
3	283-102	SQUARE WAND HANDSHOWER	ASSEMBLY	1

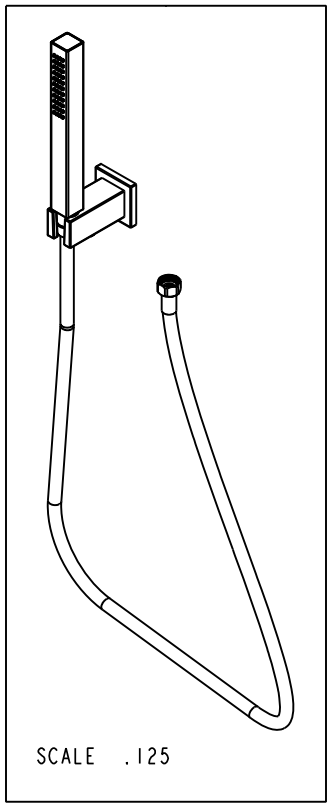

Joe Manga

Digitally signed by Joe Manga
Date: 2019.06.26 10:34:12 -07'00'

ZONE	REV	DESCRIPTION	DATE	APPROVED
-	A	EN-3900	06/26/19	J.M.
-	-	EN-3686	08/24/18	J.M.

COPYRIGHT 2005 BRASSTECH, INC. THESE DRAWINGS AND THE DESIGNS DEPICTED HEREIN ARE THE PROPRIETARY PROPERTY OF BRASSTECH. ANY USE OR REPRODUCTION IS SUBJECT TO THE EXPRESS APPROVAL OF BRASSTECH. UNAUTHORIZED USE IS STRICTLY PROHIBITED. ALL RIGHTS RESERVED.

TESTING	-	-	-
ASSEMBLY	-	-	-
PLATING	-	-	-
POLISHING	-	NEXT ASSY	USED ON
MACHINING	-	APPLICATION	
TOOLING FIXTURE #		REMOVE ALL BURRS AND SHARP EDGES	

UNITS ARE: INCHES [MM]
TOLERANCES ARE:
FRACTIONS ±1/16" DECIMALS .X ±.1 [2,5] .XX ±.06 [1,5] ANGLES ±1°
(X.XXX) DENOTES CRITICAL DIMS.
ALL THREADS ARE CRITICAL

DRAWN	R.S.	08/23/18
CHECKED	J.M.	08/24/18
APPROVED	J.M.	08/24/18

BRASSTECH INCORPORATED
2001 CARNEGIE AVE.
SANTA ANA, CA 92705
(949) 417-5207

WALL HANDSHOWER SET - CONTEMPORARY

DWG NO. 280P REV A

SCALE .312 REF. - SHEET 1 OF 2

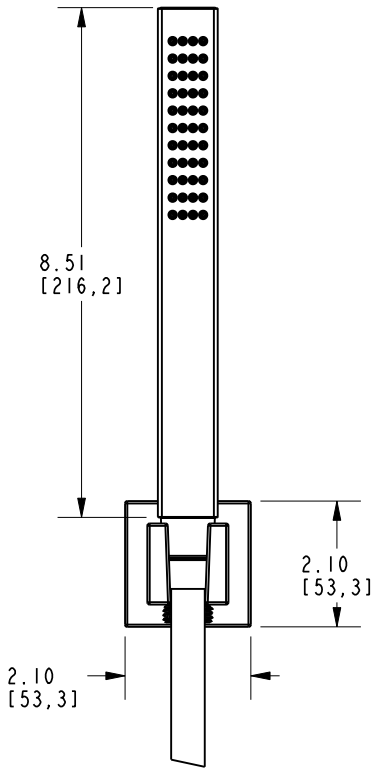

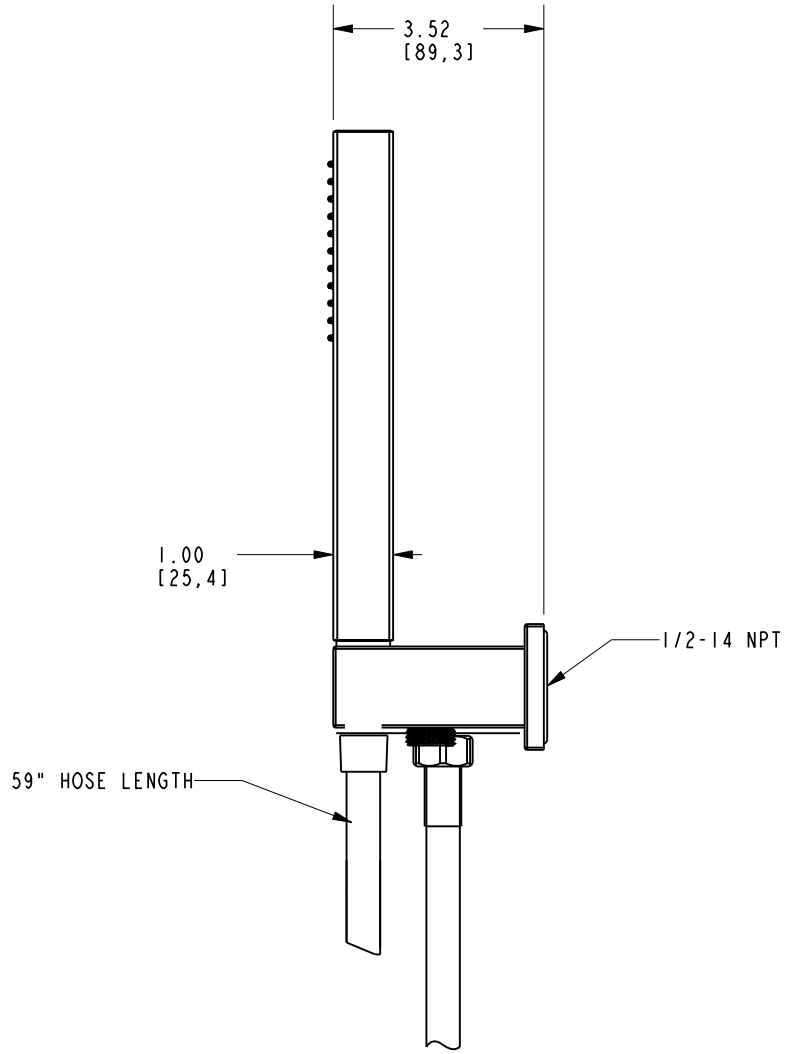

BRASSTECH INCORPORATED

2001 E. CARNEGIE AVE.
SANTA ANA, CA 92705
(949) 417-5207

DWG NO.	REV
280P	A

SCALE	REF.	SHEET
.312	-	2 OF 2