MOEN®

Specifications

There is more than one version of this model.
Page down to identify the version you have.

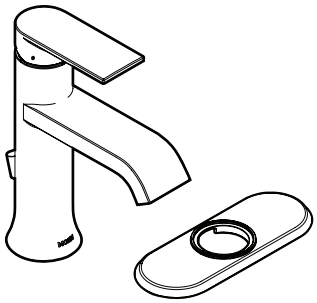

GENTA™
One-Handle Lavatory Faucet
Model: 6702
(includes deck plate)

NOTE: This faucet is designed to be installed through 1 hole or 3 holes that are 1" diameter and 2" on center

DESCRIPTION
- Metal construction with various finishes identified by suffix
- Flexible supply lines with 3/8" compression fittings
- Includes metal pop-up waste assembly
- Includes optional 3 hole deck plate (escutcheon)

OPERATION
- Lever style handle with red & blue indicators
- Temperature controlled by 100˚ arc of handle travel

FLOW
- Water usage is limited to these maximum flow rates as indicated by the corresponding product markings
- 1.2 gpm max (4.5L/min) at 60 psi

CARTRIDGE
- 1255™ Duralast™ cartridge for single-handle faucets

STANDARDS
- Third party certified to: WaterSense®, ASME A112.18.1/CSA B125.1 and all applicable requirements referenced therein
- Certified to NSF 61/9 & 372
- Products marked with 1.2 gpm are compliant with California water efficiency regulations
- Complies with California Proposition 65 and with the Federal Safe Drinking Water Act
- **ADA** for lever handle

WARRANTY
- Lifetime limited warranty against leaks, drips and finish defects to the original homeowner
- 10 year limited warranty when used in a multifamily installation
- 5 year limited warranty when used in a commercial installation

Visit www.moen.com/support for complete details and limitations

WaterSense Meets EPA Criteria
Certified by IAPMO R&T

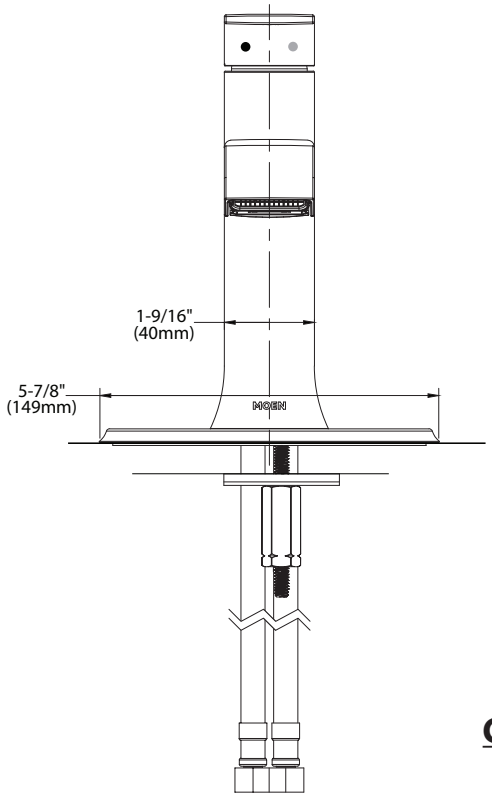

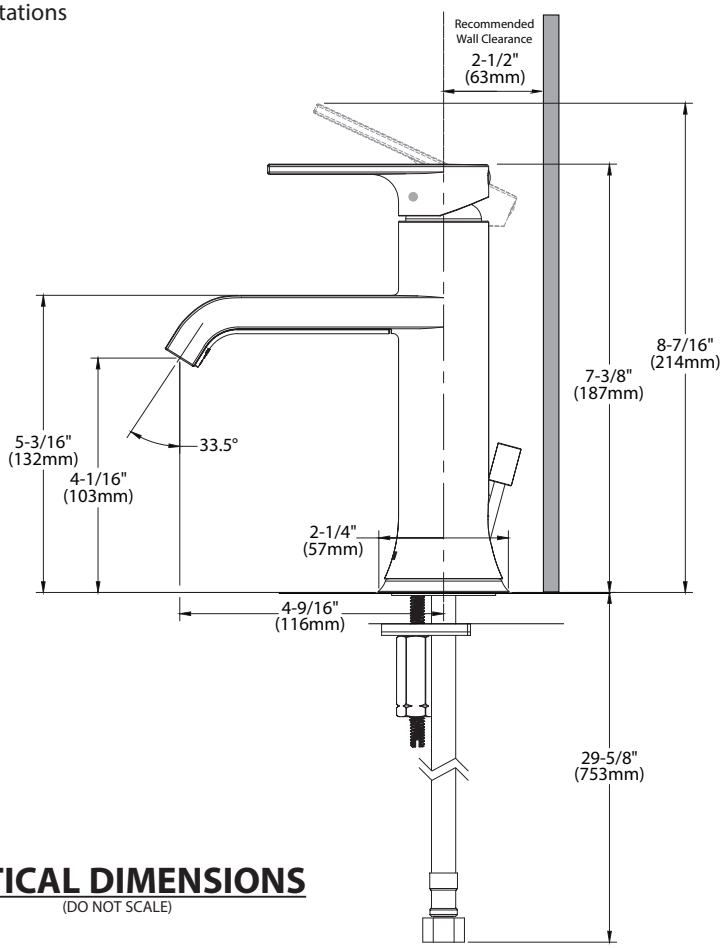

CRITICAL DIMENSIONS
(DO NOT SCALE)

Rev. 6/19

FOR MORE INFORMATION CALL: 1-800-BUY-MOEN
www.moen.com

INVICTUS SPC1-996 50000038594
Rev.Date:06/15

MOEN®

Specifications

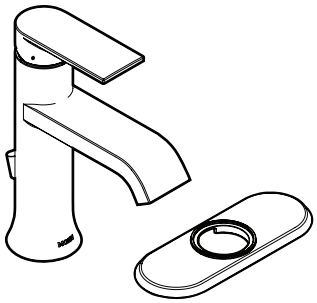

GENTA™
One-Handle Lavatory Faucet
Model: 6702
(includes deck plate)

NOTE: This faucet is designed to be installed through i hole or 3 holes that are 1" diameter and 2" on center

DESCRIPTION
- Metal construction with chrome finish
- Flexible supply lines with 3/8" compression fittings
- Includes metal pop-up waste assembly
- Includes optional 3 hole deck plate (escutcheon)

OPERATION
- Lever style handle with red & blue indicators
- Temperature controlled by 100˚ arc of handle travel

FLOW
- Water usage is limited to these maximum flow rates as indicated by the corresponding product markings
- 1.2 gpm max (4.5L/min) at 60 psi

CARTRIDGE
- 1255™ Duralast™ cartridge for single-handle faucets

STANDARDS
- Third party certified to: WaterSense®, ASME A112.18.1/CSA B125.1 and all applicable requirements referenced therein
- Certified to NSF 61/9 & 372
- Products marked with 1.2 gpm are compliant with California water efficiency regulations
- Complies with California Proposition 65 and with the Federal Safe Drinking Water Act
- **ADA** for lever handle

WARRANTY
- Lifetime limited warranty against leaks, drips and finish defects to the original homeowner
- 10 year limited warranty when used in a multifamily installation
- 5 year limited warranty when used in a commercial installation

Visit www.moen.com/support for complete details and limitations

WaterSense Meets EPA Criteria
Certified by IAPMO R&T

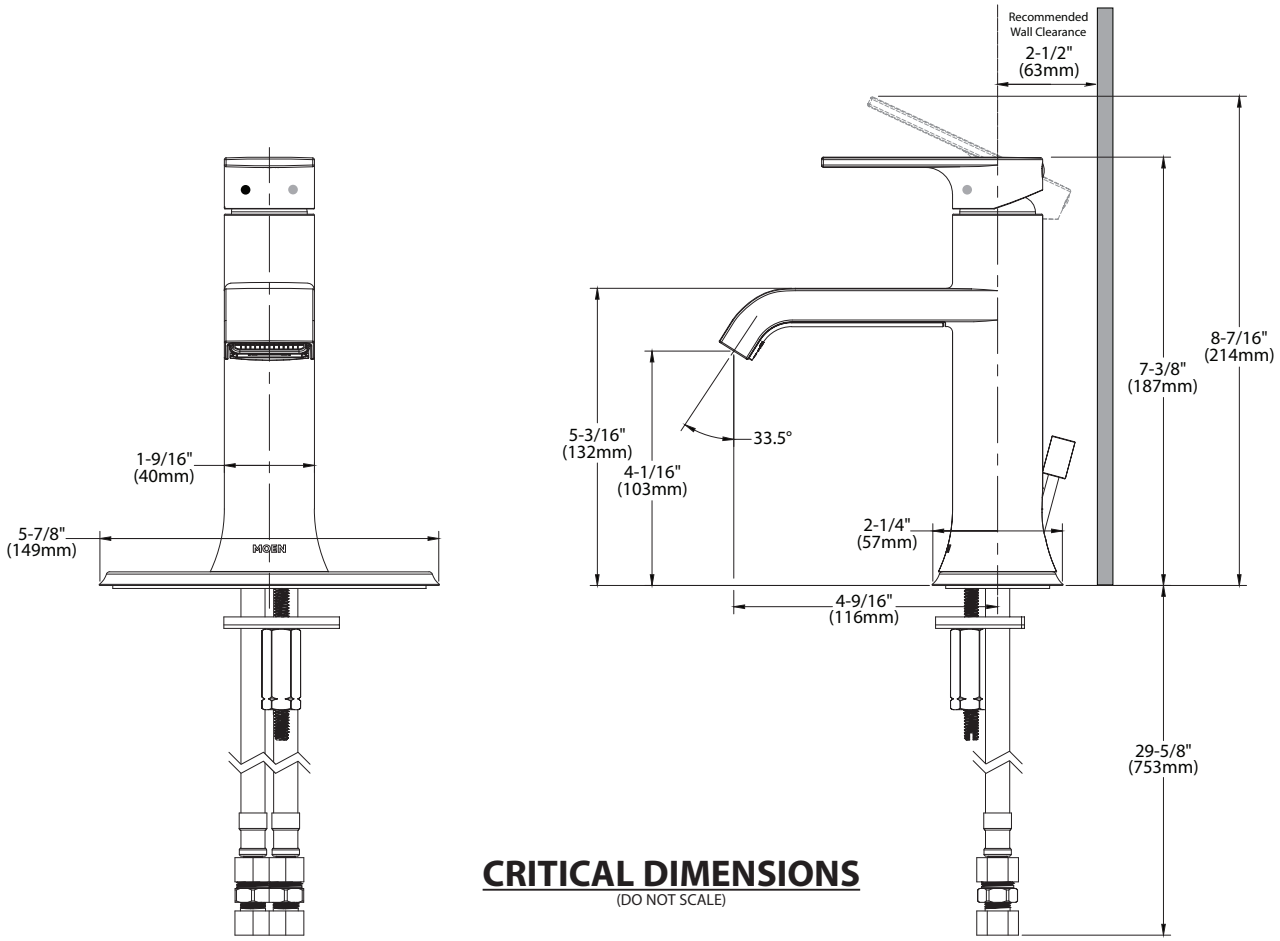

CRITICAL DIMENSIONS
(DO NOT SCALE)

Rev. 6/19

FOR MORE INFORMATION CALL: 1-800-BUY-MOEN
www.moen.com

INVICTUS SPC1-996 50000038594
Released 15