NATIVE TRAILS

SPECIFICATIONS

30" PALOMAR VANITY TOP WITH INTEGRAL SINK

NativeStone® Collection

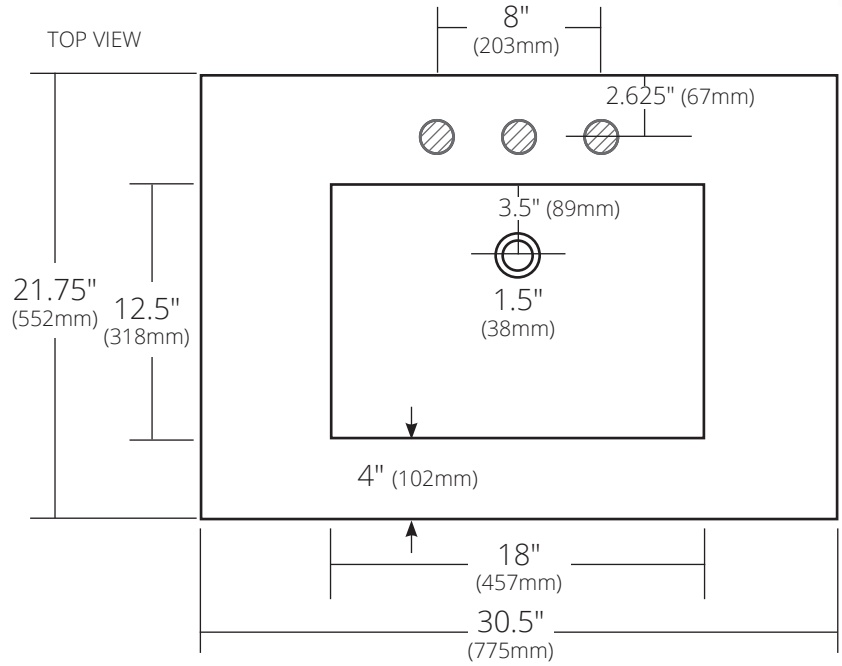

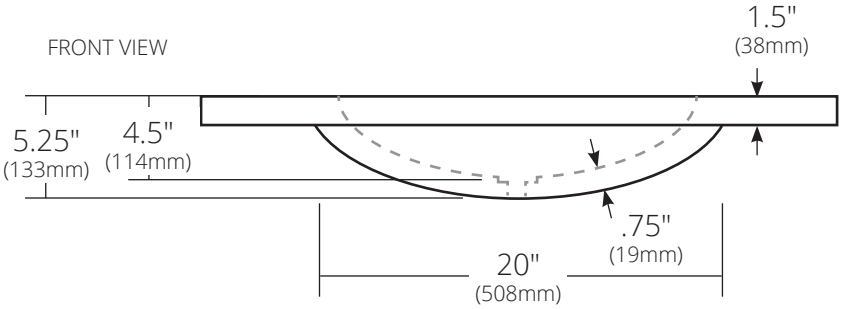

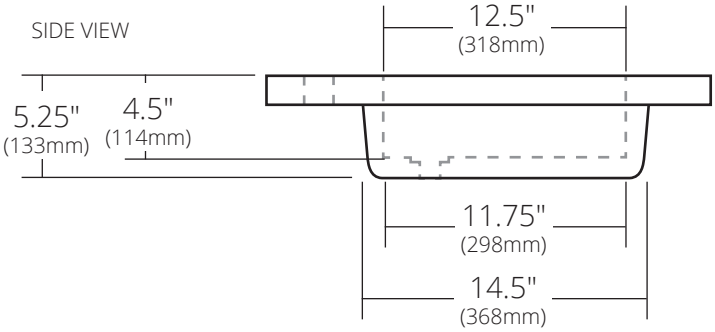

8" Faucet Spread
NSVNT30-A Ash
NSVNT30-S Slate
NSVNT30-P Pearl
NSVNT30-E Earth

Single Faucet Hole
NSVNT30-A1 Ash
NSVNT30-S1 Slate
NSVNT30-P1 Pearl
NSVNT30-E1 Earth

PRODUCT DETAILS

- 30.5" x 21.75" x 5.25" OD (775mm x 552mm x 133mm)
- Basin 18" x 12.5" x 4.5" (457mm x 318mm x 114mm)
- 1.5" (38mm) drain opening
- Pre-drilled for 8" (203mm) faucet spread or single faucet hole
- Handcrafted from sustainable NativeStone®
- Sealed with impermeable nano sealer

COORDINATING PRODUCTS

- Drains: DR120, DR130 or DR150
- NativeStone® Sealer

STANDARDS COMPLIANCE

- UPC/cUPC compliant
- ADA COMPLIANT

IMPORTANT

Do NOT use tape or other adhesives on NativeStone® as it may remove the sealer.

Due to the handcrafted nature of this product, it will vary in finish, texture, and other details. Dimensions may vary up to .25" (6mm).