Rinnai

PERFORMANCE DATA

To Obtain Performance Data:

1. Press and hold the ▼ (Down) button for two seconds (Fig 1).
2. While holding the ▼ (Down) button, press and hold the "Indirect Tank" button (hold both buttons at the same time) (Fig 1).
3. Use the ▲ (Up) and ▼ (Down) buttons to scroll to the desired information described in Table 1. Performance Data (Fig 2).
4. The data for the performance number automatically appears in the display (Fig 3).
5. To exit performance data, repeat step 2 above.

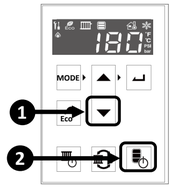

Fig 1. "Down" and "Indirect Tank" Buttons

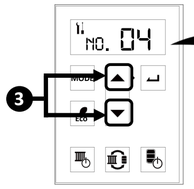

Fig 2. "Up" and "Down" Buttons

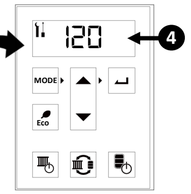

Fig 3. Data Appearing in Display

Table 1. Performance Data

#	Data	Unit
01	Water Pressure	PSI/bar[1]
03	Supply Temperature	°F/°C[1]
04	Return Temperature	°F/°C[1]
05	Freeze Protection Temperature	°F/°C[1]
06	Exhaust Temperature	°F/°C[1]
11	Fan Frequency	Hz
17	Venturi Position	0=Closed, 1=Open
18	Venturi Cycles	x100
20	Pump Cycles	x100
21	Pump Hours	x10
22	Pump for Boiler	0=OFF, 1=ON
23	Pump for System (Pump 1)	0=OFF, 1=ON

#	Data	Unit
24	Pump for Indirect Tank (Pump 2)	0=OFF, 1=ON
30	Indirect Tank Thermistor Temperature	°F/°C[1]
31	Outdoor Temperature	°F/°C[1]
40	Energization Hours	x100
41	Combustion Hours	x10
42	Combustion Cycles	x100
45	Commissioning Cycles	x1

[1] See "Units of Measurement" section to the right.

Units of Measurement

1. Press the "Mode" button.
2. Press the ▲ (Up) or ▼ (Down) arrows to select a unit of measurement (refer to Table 2).

Table 2. Units of Measurement

Units of Measurement	Temp.	Water Flow	Pressure
1: English	°F	gal/min	psi
2: Metric	°C	L/min	bar

ELECTRICAL DIAGNOSTICS

Table 3. Diagnostic Points

COMPONENT	WIRE COLOR	VOLTAGE	RESISTANCE	PCB Connector	PCB PIN
Power Supply	Black-White	108-132 VAC	N/A	CN24	1-3
Flame Rod	Yellow-Body	More than 2 VAC[2]	N/A	CN1	2
Spark Electrode	Red-Black	11-14 VDC[2]	N/A	CN1	11-22
Combustion Fan	Red-Black	7-48 VDC[2]	N/A	CN1	3-5
	White-Black	2-14 VDC[2]	N/A	CN1	5-9
	Yellow-Black	11-14 VDC	N/A	CN1	5-7
Venturi Control Device	Blue-White	N/A	33-43Ω	CN1	17-19
	Yellow-Red (No.9)			CN1	13-15
	Black-Red (No.3)	11-14 VDC	N/A	CN1	11-29
	Black-Brown	Close Position: Less than 1 VDC Open Position: 4-6 VDC		CN1	26-29
	Black-Grey	Close Position: 4-6 VDC Open Position: Less than 1 VDC		CN1	24-29
Gas Solenoid Valve	Yellow-Black	11-14 VDC[2]	15-25Ω	CN1	28-30
Exhaust Thermistor	White-White	N/A	59°F: 11.4-14kΩ 86°F: 6.4-7.8kΩ 113°F: 3.6-4.5kΩ 140°F: 2.2-2.7kΩ 221°F: 0.6-0.8kΩ Disconnect the connector and measure at thermistor side.	CN11	16-19
Supply Thermistor	White-White			CN11	12-19
Return Thermistor	White-White			CN11	10-20
Freeze Protection Thermistor	Black-Black		32°F: 38k-43k 50°F: 22k-26k 68°F: 14k-17k Disconnect the connector and measure at thermistor side.	CN11	10-14
Transformer	White-Grey	108-132 VAC	N/A	CN18	1-2
	Red-Red	20-30 VAC (possible to measure at Output terminal as substitute position)		CN18	3-4
Overheat Switch	Black-Black	Less than 1 VDC	Less than 1Ω	7(CN11)-27(CN1)	
Water Pressure Sensor	Red-Black	11-14 VDC	N/A	CN1	11-29
	Yellow-Black	0 kPa: 655-745 mV; 200 kPa: 2,155-2,245 mV; 400 kPa: 3,655-3,745 mV		6(CN11)-29(CNH1)	
Water Level Electrode	White-White	11-14 VDC	N/A	8(CN11)-29(CN1)	
Air Handler	Red-Black	11-14 VDC	N/A	CN8	1-2
Control Panel	Black-Black	11-14 VDC	N/A	CN2	1-4

[2] When the unit is operating.

Important Safety Notes

There are a number of (live) tests required when performing electrical diagnostics on this product. Proceed with caution at all times to avoid contact with energized components inside the boiler. Only trained and qualified service technicians should attempt to repair this product. Before checking for resistance readings, disconnect the power source to the unit and isolate the item from the circuit (unplug it).

Electrical Diagram

Refer to the Wiring Diagram attached to the back of the boiler front cover.

Flame Rod

Place one lead of your meter to the flame rod and the other to the ground. When the unit is attempting to ignite, you should read more than 2 VAC.

Amp Fuses

This unit has two (10) amp glass fuses located on the PC Board. Remove the fuses and check continuity through it. If you have continuity through each fuse then it is functioning. Otherwise, the fuse is blown and must be replaced.

DIP SWITCHES

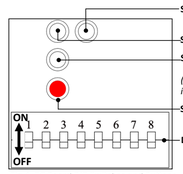

SW1 Forced Hi/Low Fire Modes *(Section 12 in Manual)*

SW2 Deaeration Mode *(Section 10 in Manual)*

SW3 Data Transfer Mode

(Transfers PC Board data when replacing PC Board. Refer to instructions included in replacement parts.)

SW4 Parameter Settings *(Section 12 in Manual)*

DIP Switches *(Section 12 in Manual and Table 4 below)*

Fig 4. PC Board DIP Switches and Buttons

Table 4. DIP Switch Functions

#	DIP Switch Function
1	**Outdoor Temperature Sensor:** Enables or disables outdoor temperature sensor. **OFF (Default):** Outdoor Temperature Sensor in Use **ON:** Outdoor Temperature Sensor Not in Use
2	**Thermostat Usage:** Changes mode between Thermostat Usage and **Central Heating (CH)** Button. **OFF (Default):** Thermostat Used **ON: CH** button used. Boiler fires based on return water temperature
3	**Indirect Tank:** Enables the Indirect Tank Function for Pump 2. **OFF (Default):** On **ON:** Off (Pump 2 Operates at a CH Zone Pump)
4	**Indirect Tank Thermistor/Thermostat Selection:** Selects the method of controlling the indirect tank. **OFF (Default):** Thermistor; **ON:** Thermostat
5	**Gas Valve Solenoid:** Manually shuts down the integrated solenoid gas valve. **OFF (Default):** Normal Operation; **ON:** Fixed Closed (prevents boiler operation)
6	**Altitude Setting:** Sets the appropriate elevation of the boiler installation. **OFF/ON:** Depends on Altitude. See "Table 5. High Altitude DIP Switches" for specific DIP switch settings.
7	**Altitude Setting:** Sets the appropriate elevation of the boiler installation. **OFF/ON:** Depends on Altitude. See "Table 5. High Altitude DIP Switches" for specific DIP switch settings.
8	**Vent Type Selection:** Selects the venting material used. The boiler is set from the factory to be installed in a PVC venting system. If CPVC, PP, or other approved venting is used, this setting may be adjusted. See Section 5 in Manual for more information. **OFF (Default):** PVC **ON:** Higher Temperature Exhaust Vent Material (PP, CPVC, or Stainless Steel)

Table 5. High Altitude DIP Switches

ALTITUDE	DIP Switch 6	DIP Switch 7
0-2,000 ft (0-610 m) (Default)	OFF	OFF
2,001-5,400 ft (610-1,646 m)	ON	OFF
5,401-7,700 ft (1,646-2,347 m)	OFF	ON
7,701-10,200 ft (2,347-3,109 m)	ON	ON

PARAMETER SETTINGS

1. To access the parameter settings, press and hold the red button on the PC Board for five seconds (Fig 5).

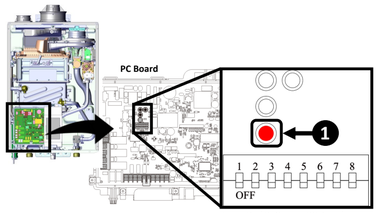

Fig 5. Red Button on PC Board

2. Press the "Mode" button on the controller (Fig 6).
3. Press the ▲ (Up) or ▼ (Down) arrows to select a parameter setting. Press the "Select" button (Fig 7).

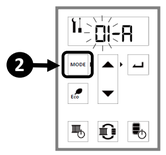

Fig 6. "Mode" Button

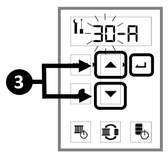

Fig 7. "Up," "Down" and "Select" Buttons

4. Press the ▲ (Up) or ▼ (Down) arrows to change the selection for the setting number (such as 30-A or 30-b). Then, press the "Select" button (Fig 8).

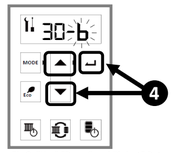

Fig 8. "Up," "Down" and "Select" Buttons

5. To exit parameter settings and enter normal operation mode, press either the red button on the PC Board or the "Mode" button on the controller.

For more information on parameter settings, refer to the I-Series Condensing Boiler Installation and Operation Manual.

Table 6. Parameter Settings

Parameter Number	Setting Description	Selection A	Selection b	Selection C	Selection d	Record date and parameter when individual parameters have been adjusted factory: Parameter Value	Date Adjusted	Parameter Value	Date Adjusted
00	Pressure Indication on the Control Panel. The current pressure will cycle on the controller display.	Yes	No						
01	Outdoor Reset Curve. This parameter is available when Dip Switch 1 is in the OFF (default) position. Select the proper curve from below. **Curve 1:** Standard baseboard, high efficiency air handler, cast iron or panel radiators. **Curve 2:** Staple-up radiant heat. **Curve 3:** High temperature air handler or undersized baseboard. **Curve 4:** Custom curve based on customer input.	Curve 1	Curve 2	Curve 3	Curve 4				
02	Boost This parameter is available when Dip Switch 1 is in the OFF (default) position. Boost Mode increases the CH set temperature above the outdoor reset curve target when the boiler has been running on an unusually long call for heat.	No	30 Minutes	60 Minutes					
03	Maximum Outdoor Temperature at which the Boiler will Fire in CH Mode. This parameter is available when DIP switch 1 is in the OFF (default) position. This sets the maximum outdoor temperature the boiler will fire in CH mode.	No Maximum	77°F (25°C)						
30	Indirect Tank Supply Temperature with Thermostat Control. This parameters is available when Indirect Tank "In Use" is selected on DIP switch 3 and when Indirect Tank Control "Thermostat" selected on DIP switch	180°F (82°C)	160°F (71°C)	140°F (60°C)					
	Indirect Tank Supply Temperature with Thermistor Control. This parameters is available when Indirect Tank "In Use" is selected on DIP switch 3 and when Indirect Tank Control "Thermistor" selected on DIP switch	180°F (82°C)	Setting Temperature +18°F (+10°C)	Setting Temperature +27°F (+15°C)					
31	Allowed Indirect Tank Temperature Drop before Firing (with Thermistor). This parameters is available when Indirect Tank "In Use" is selected on DIP switch 3 and when Indirect Tank Control "Thermistor" selected on DIP switch	5.4°F (3°C)	10.8°F (6°C)	16.2°F (9°C)	21.6°F (12°C)				
32	Indirect Tank Operation Option. This parameters is available when Indirect Tank "In Use" is selected on DIP switch 3. When a 3-way valve and the boiler pump are to be used for recovering the indirect tank select "b".	Use Pump	Use 3-Way Valve						
33	Indirect Tank Simultaneous Heating. This parameters is available when Indirect Tank "In Use" is selected on DIP switch 3 and when "Use Pump" is selected in Parameter 32.	Indirect Tank Priority	Simultaneous Heating with Indirect Tank and						
34	Indirect Tank Priority Time. This parameters is available when Indirect Tank "In Use" is selected on DIP switch 3.	60 minutes	40 minutes	90 minutes					
35	CH Temperature Limitation to Allow Simultaneous Operation with Indirect Tank. This parameters is available when Indirect Tank "In Use" is selected on DIP switch 3 and when "Use Pump" is selected in Parameter 32 and also when selecting "Simultaneous Heating with Indirect Tank and CH" in Parameter 33.	Yes	No						
40	Linked Operation Between CH Pump 1 and 2. This parameter enables linked operation between the CH Pump 1 and 2. (default).	No	Yes (Linked Together)						
41	Linked Operation Between Main Boiler Pump and CH Pump 1. This enables the linked operation between the main boiler pump and CH pump 1.	No	Yes (Linked Together)						
42	Main Pump Runs When the Target Temperature is Achieved. This selects the mode of the main pump running when the target setpoint is achieved.	Continuously	Intervals						
43	External Pump Runs When the Setpoint Temperature is Achieved. This selects the mode of the external pump(s) running when the target setpoint is achieved.	Same as Main Pump	Does Not Run						
44	External Pump Runs When Freeze Protection is in Operation. This selects how the external pump operates when freeze protection is in operation.	Does Not Run	Same as Main Pump (if selected, hydraulic separation is needed)						
45	Freeze Protection Level. This selects the freeze protection level. Selecting "b" will prevent the boiler from operating in freeze protection mode more than necessary.	Default	When Boiler is Installed in a Warm Room						
46	The Differential Temperature from Ceasing Fire to Firing Again. How much temperature drop is permitted by the supply water thermistor before the boiler will fire again.	Normal	Quick						
	CH Setting Temperature.	Temperature Drop							
	168-182°F (75-82°C)	27°F (15°C)	15°F (8°C)						
	86-166°F (30-74°C)	15°F (8°C)	9°F (5°C)						
47	The Time Which the Boiler is not Allowed to Fire Again for CH. This selects the time which the boiler will not be able to fire again for CH after the burner has shutdown.	Normal (3 Minutes)	Quick (10 Seconds)						
48	Heating Eco Mode On Time. The setting changes the on time of the heating Eco mode.	30 Minutes	15 Minutes						
49	Will the boiler shut down on a high return water temperature. This setting is for whether the boiler will shut down at high return water temperatures.	Yes	No						
60	Not Available.	Not Available							
80	Gas Type. For selecting gas type when conducting gas conversion.	Natural Gas	Liquid Propane						
81	Not Available.	Not Available							
82	Vent Material Used. This selects the venting material used. The boiler is set from the factory to be installed in a PVC venting system. If CPVC, PP, or other approved venting is used, this may be adjusted. See the section on PVC Safety Switch for more information.	PVC	Material other than PVC: CPVC/PP/Other						

DIAGNOSTIC CODES

To Display Diagnostic Codes:

1. Press and hold the **Indirect Tank** button for two seconds and then the ▲ (Up) button simultaneously (Fig 9).
2. The last nine maintenance codes display and flash one after the other.
3. To exit diagnostic codes and return the boiler to normal operation, press and hold the "Indirect Tank" button for two seconds, and then the ▲ (Up) button simultaneously.

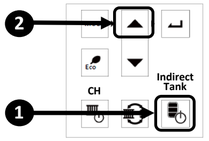

Fig 9. "Up" and "DHW" Buttons

Table 7. Error Reset

Power Reset	Heat Exchanger Overheat (140), Venturi Control (150), High Exhaust Temperature (540), and Freeze issue (890) can be reset by shutting down power to the boiler.
Interlock Reset	Venturi (170) and Solenoid Valve Circuit (520) can be reset by pushing and holding button SW1 and 2 for five seconds.
Other Reset	Other error can be reset by Indirect Tank "On/Off" button or "Central Heating" (CH) button.

Table 8. Diagnostic Codes

00 Air Supply or Exhaust Blockage/Condensate Trap is Full
- Fan current initial check error.
- Ensure condensate line and trap is not blocked.
- Ensure internal air filter is clean with no obstructions.
- Ensure high altitude setting is set properly (See Table 5. High Altitude DIP Switches).
- Ensure combustion air and exhaust vents are not blocked and the approved venting materials are being used.
- Ensure either the exhaust ring or intake cap is removed properly.
- Ensure vent length is within limits.
- Check fan for debris and ensure wheel turns freely.
- Verify fan check valve is not stuck between fan casing and burner body.

10 No Ignition (Unit Not Turning On)
- Ignition Error.
- Check that the gas is turned on at the boiler, gas meter, and/or propane cylinder.
- If the unit is installed in a propane system, ensure that gas is in the tank.
- Bleed all air from the gas lines.
- Check the ground wire for the PC Board.
- Ensure the flame rod wire is connected.
- Ensure the igniter is operational.[3]
- Ensure the venting is installed in accordance with the I-Series Boiler Installation and Operation Manual.
- Check that the surface of the electrode and flame rod are clean.
- Check gas solenoid valves for open or short circuits.[3]
- Verify gas orifice installed is correct for the gas system the unit is installed in.
- Check flame rod voltage to ground during ignition.

120 Flame Failure
- Boiler has flame failure.
- Check that the gas is turned on at the boiler, gas meter, and/or propane cylinder.
- If the unit is installed in a propane system, ensure that gas is in the tank.
- Ensure the venting is installed in accordance with the I-Series Boiler Installation and Operation Manual.
- Ensure the flame rod wire is connected.
- Ensure the gas type and inlet gas pressure are correct.
- Bleed all air from the gas lines.
- Check the ground wire to the PC Board.
- Check flame rod voltage to ground during ignition.

140 Heat Exchanger Overheat
- Overheat switch is tripped.
- Measure the resistance of the Overheat Switch.[3]
- Check the heat exchanger surface for hot spots which may indicate blockage due to scale buildup.
- Ensure the boiler pump is not locked up.
- Ensure that all of the valves in the CH circuit are open.
- Ensure the boiler and CH circuit does not have a freezing condition.
- The surface of the heat exchanger may turn to a black color as stainless steel is tempered even in normal conditions. This does not indicate an abnormal condition.
- Check for damage on the exhaust, seal, and venting.
- Ensure the parameter A0 corresponds to the gas type the unit is installed in.
- Ensure the gas orifice is the proper orifice for the gas type in use.
- Ensure deaeration has been performed.

150 Venturi Control
- Venturi operation error.
- Ensure the venturi motor is operating correctly.[3]
- Replace the gas valve assembly.

170 Venturi Blockage
- Check the venturi and silencer for blockage.
- Before resetting this error, check if the condensate drain is blocked and if the venting is connected properly.

181 Indirect Tank Temperature
- Indirect tank runs for more than six hours without cycling off.
- Ensure the tank size is adequate.
- Check the thermistor location.
- Ensure the system is plumbed properly.
- Check the supply temperature for tank is higher than tank setting temperature (Parameter 30).
- Check sensor wiring for damage.
- Measure resistance of sensor.[3]
- Replace sensor if necessary.

190 Electrical Grounding
- Secondary circuit ground fault.
- Check all electrical components for electrical short.

250 Condensate Pump (Accessory)
- Boiler will operate for 60 seconds.
- Confirm wire connections and harnesses are good.
- Ensure the condensate reservoir is empty and condensate pump is operational.

310 Freeze Protection Thermistor
- Check sensor wiring for damage.
- Measure the resistance of the sensor.
- Replace if necessary.

353 Supply Thermistor
- Check sensor wiring for damage.
- Clean the surface of the sensor.
- Measure the resistance of the sensor.
- Check the return thermistor.
- Replace if necessary.

363 Return Thermistor
- Check sensor wiring for damage.
- Measure the resistance of the sensor.
- Replace if necessary.

371 Indirect Tank Thermistor
- Ensure DIP switch 4 is set to the appropriate setting.
- Check sensor wiring for damage.
- Measure the resistance of the sensor.
- Replace if necessary.

380 Exhaust Thermistor
- Check sensor wiring for damage.
- Clean the surface of the sensor.
- Measure the resistance of the sensor.
- Check the return thermistor.
- Replace if necessary.

393 Outdoor Thermistor
- Ensure that DIP switch 1 is set to the appropriate position.
- Check sensor wiring for damage.
- Measure the resistance of the sensor.
- Replace if necessary.

[3] See "Electrical Diagnostics" section of this document.

400 Pressure Sensor
- Check sensor wiring for damage.
- Measure the voltage of the sensor.
- Replace if necessary.

490 High/Low Water Pressure
- If the water pressure is too low, add water into the system until at least 13 PSI is observed.
- Ensure there are no leaking components in the CH system.
- If the pressure is too high, adjust the pressure to a maximum of 30 PSI.
- Ensure the pressure relief valve and water fill are working correctly.
- Ensure deaeration has been performed.

493 Low Water Cut-Off (LWCO)
- Ensure the LWCO device is working correctly.
- Ensure the LWCO jumper is connected properly when LWCO is not in use.
- Ensure the output is 24 VAC on the PCB. If it is not, check the transformer harness and output of transformer.

520 Solenoid Valve Circuit
- Check the flame rod and wire for damage.
- Close the gas shut off valve installed near the boiler.
- Ensure the flame rod and wire are not wet.
- Check the output from the PC Board to the solenoid gas valve.
  - If the output from the PC Board is abnormal, replace the PC Board.
  - If the output from the PC Board is normal, replace the gas control.

540 High Exhaust Temperature
- Check the exhaust thermistor wiring for damage.
- Clean the surface of the thermistor.
- Measure the resistance of the exhaust thermistor.[3]
- If the sensor has been replaced and the error still appears, check the return thermistor.
- Check the exhaust duct, seal, and venting for damage.

60 Combustion Fan
- Check the motor wire harness for loose or damaged connections.
- Measure resistance and voltage of motor wire harness.[3]
- Ensure the combustion fan spins freely.

700 PC Board
- PC Board circuit error.
- Replace PC Board.

70 Solenoid Valve Circuit
- Ensure Dip switch 5 on the PC Board is in the OFF position (default).
- Ensure the gas control wire is not loose or damaged.
- Replace the PC Board.

720 Flame Rod
- Check the flame rod and wire for damage.
- Ensure the flame rod and wire are not wet.
- If there is no issue with the flame rod or wiring, replace the PC Board.

890 Freeze Issue
- The boiler checks the heat exchanger temperature at the time of operation.
- If the temperature is too low, an error will occur.
- Check if there is freezing in the boiler or CH system.

999 PC Board Mismatch
- This code occurs when the PC Board and the internal logic do not match.
- Check if the software versions of the board and operation board do not match.

FFF Maintenance Indicator
- This code is a placeholder in diagnostic code history indicating a service provider performed maintenance or service.
- Enter this code after performing service by pressing the following buttons at the same time: UP, DOWN, and Indirect Tank. "FFF" appears on the monitor (Fig 10).

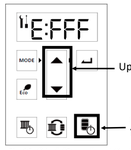

Fig 10. "Up," "Down" and "Indirect Tank" Buttons

No Code Boiler does not start heating with a heating demand present.
- Supply temperature or return temperature inside the boiler may be too hot.
- Ensure the pump operates properly.

No Code The boiler does not operate with the CH setting button.
- If DIP switch 2 is OFF, CH operation will function via the room thermostat.

No Code Boiler does not start heating the indirect tank, although the indirect tank is calling for heat.
- After the tank priority time (Parameter 34) passes, the boiler will be in heating priority for 60 minutes.

No Code Supply Temperature is different from the setting temperature on the controller.
- During outdoor sensor control, the supply temperature will vary dependent on the outdoor temperature.
- During simultaneous operation of an Indirect Tank and CH, the supply temperature for CH is based on Indirect Tank control.

No Code CH capacity is insufficient
- Ensure the parameters are properly set for the installation.
- During simultaneous operation of an Indirect Tank and CH, flow volume to heating can be reduced.

No Code Pump or fan is operating even with no demand
- The boiler may start or operate the pump for freeze protection operation.
- The pump may intermittently operate to prevent it from becoming stuck.

H167-0775-2×01(00)

070 00012 66890 1

Gas Conversion Kits		
Models	Gas Type	Kit Number
i150S	NG/LPG	803000040
i120S		
i090S		
i060S		

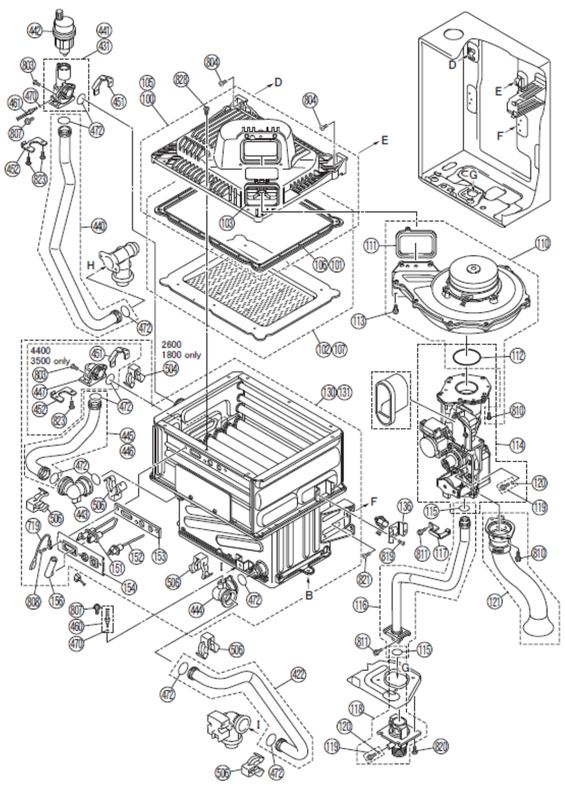

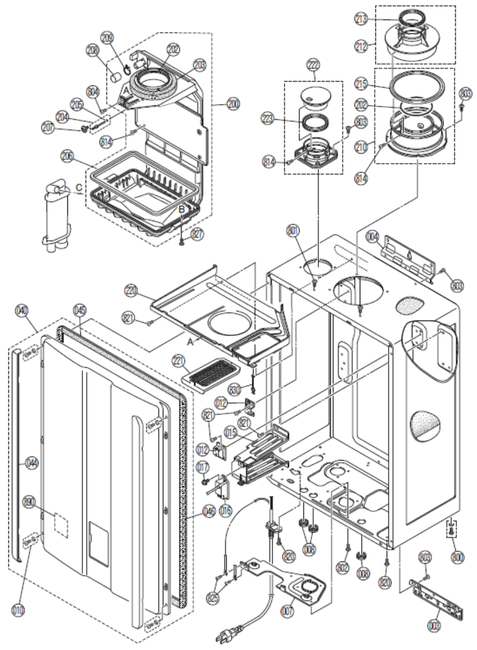

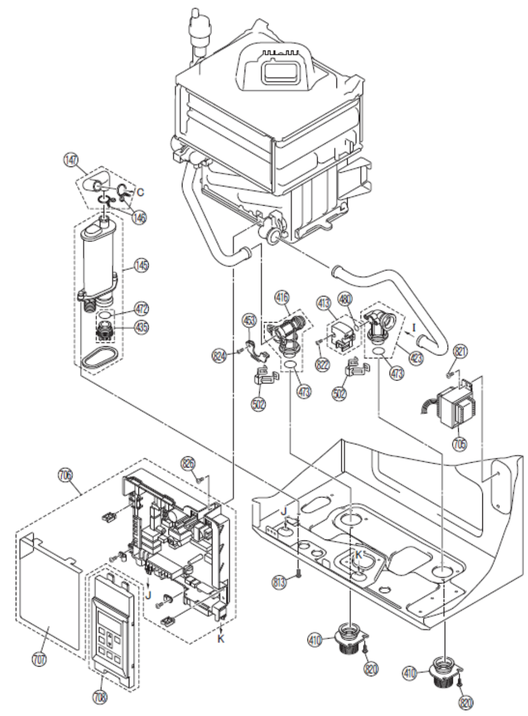

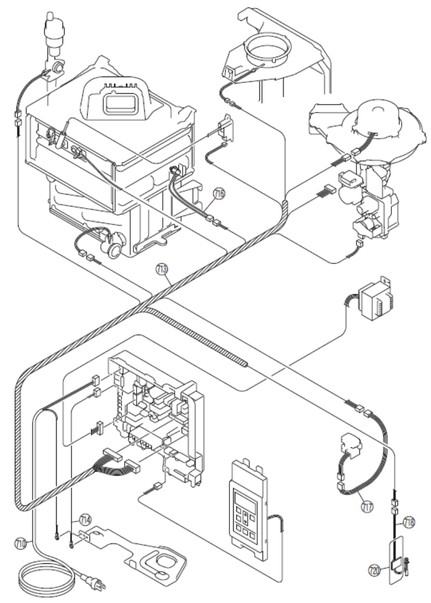

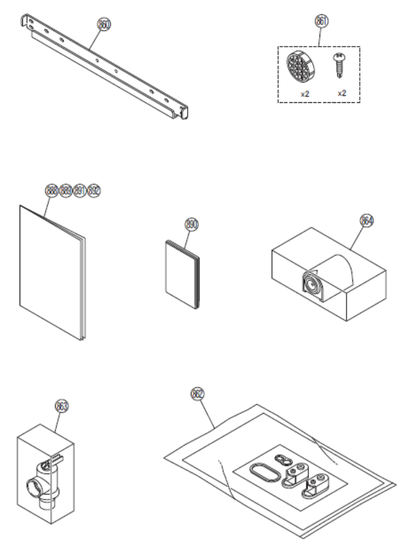

ITEM	DESCRIPTION	PART NUMBER	i150S	i120S	i090S	i060S
003	Lower Wall Mount Bracket	109000281	1	1	1	1
004	Upper Wall Mount Bracket	109000594	1	1	1	1
007	Connection Reinforcement Plate	809000165	1	1	1	1
008	Rubber Bushing	CF79-41020-A	3	3	3	3
010	Residential Screw and Washer	106000645	4	4	4	4
012	Combustion chamber support plate	109000597	2	2	2	2
015	Igniter Bracket	109000599	1	1	1	1
016	Igniter Assembly	105000230	1	1	1	1
017	Grounding Screw	CP-80452	1	1	1	1
040	Front panel Assy	809000167	1	1	1	1
044	Screw Cover	109000230	2	2	2	2
045	Front Panel Packing-Top	109000120	2	2	2	2
046	Front Panel Packing-side	109000608	2	2	2	2
100	Burner Assembly-Large	806000049	1	1		
101	Burner Gasket-Large	109000609	1	1		
102	Burner Plate Assembly-Large	806000050	1	1		
103	Combustion Check valve Assembly	107000262	1	1	1	1
105	Burner Assembly-medium	806000051			1	1
106	Burner Gasket-medium	109000610			1	1
107	Burner Plate Assembly-medium	806000052			1	1
110	Combustion Fan Assembly	108000081	1	1	1	1
111	Fan mounting packing	109000611	1	1	1	1
112	O-ring	109000612	1	1	1	1
113	Hexagon Head Screw	ZQAA0514UK	3	3	3	3
114	Gas Valve Assembly With Orifice	106000117	1	1	1	1
115	O-ring	109000252	2	2	2	2
116	Gas connection pipe Assy	806000054	1	1	1	1
117	Gas tube Bracket	109000635	1	1	1	1
118	Inlet Gas Supply Connection	106000119	1	1	1	1
119	Inlet Gas Test Port Screw	106000138	2	2	2	2
120	O-ring	M10B-13-4	2	2	2	2
121	Noise filter	106000120	1	1	1	1
130	Heat Exchanger Assembly-Large	807000173	1	1		
131	Heat Exchanger Assembly-medium	807000174			1	1
136	OHS Bracket	109000614	1	1	1	1
145	Condensate Trap Assembly	807000175	1	1	1	1
146	Band RC98HPi/e, Cond drain tube, bottom KT	109000138	2	2	2	2
147	Condensate Drain tube	807000176	1	1	1	1
151	Electrode	105000233	1	1	1	1
152	Flame Rod	105000234	1	1	1	1
153	Electrode packing	109000617	1	1	1	1
154	Electrode Plate	109000618	1	1	1	1
156	Electrode sleeve	109000620	1	1	1	1
200	Exhaust duct Assy	808000050	1	1	1	1
202	O-ring	108000018	2	2	2	2
203	Exhaust Duct Packing	109000621	1	1	1	1
204	Thermistor	105000235	1	1	1	1
205	O-ring	107000323	1	1	1	1
206	Exhaust duct seal	808000051	1	1	1	1
207	Thermistor Screw	109000622	1	1	1	1
208	Combustion Analysis Port Cap	806000057	1	1	1	1
209	Band	109000137	1	1	1	1
210	Flue Connection Assembly	108000083	1	1	1	1

ITEM	DESCRIPTION	PART NUMBER	i150S	i120S	i090S	i060S
212	Exhaust pipe connection port - 2 inch	108000084	1	1	1	1
213	Exhaust Gasket - 2 inch	109000623	1	1	1	1
215	Air supply pipe seal ring	108000017	1	1	1	1
220	Air supply box	108000085	1	1	1	1
221	Air supply filter (set)	108000086	1	1	1	1
222	Air Supply Connection	108000087	1	1	1	1
223	Air Supply Gasket - 2 inch	109000624	1	1	1	1
410	CH Outlet Connection	807000182	2	2	2	2
413	Water Pressure Sensor Assembly	807000185	1	1	1	1
416	Plate Heating Fittings Assy	807000209	1	1	1	1
422	CH Heating Return Pipe Assembly	807000208	1	1	1	1
423	Heating Fitting Assembly	807000210	1	1	1	1
431	Heat Exchanger Pipe Connection Assy-Large	807000193	1	1		
435	Trap Drain Plug Assy	807000195	1	1	1	1
440	HEX-CH Heating Connection Pipe	807000196	1	1	1	1
441	Heat Exchanger Pipe Connection Assy-Medium	807000197			1	1
442	Air vent	808000052	1	1	1	1
443	Secondary Heat Exchanger Outlet Fitting	807000198	1	1	1	1
444	Secondary Heat Exchanger Inlet Fitting	807000199	1	1	1	1
445	Primary-Secondary Pipe Assy-Large	807000200	1	1		
446	Primary-Secondary Pipe Assy-Medium	807000201			1	1
447	Primary-Secondary Connecting Fitting	807000202	1	1		
451	Pipe Bracket	809000168	2	2	1	1
452	Retention Clip	809000169	2	2	1	1
453	Pipe Bracket	809000170	1	1	1	1
460	Thermistor Sensor	805000079	1	1	1	1
461	Thermistor Sensor	805000080	1	1	1	1
470	O-ring	807000215	2	2	2	2
472	O-ring	807000204	11	11	10	10
473	O-ring	807000205	2	2	2	2
480	O-ring	807000207		1	1	1
502	Clip	809000173	2	2	2	2
504	Clip	809000174			1	1
506	Clip	109000638	5	5	5	5
705	Transformer	805000086	1	1	1	1
706	PC Board Assembly	805000092	1	1	1	1
707	PC Board Cover	809000184	1	1	1	1
708	Controller	805000093	1	1	1	1
709	PC Board Assembly	805000094	1	1	1	1
710	Power cord Assembly FF	105000238	1	1	1	1
713	Sensor Harness-2	805000095	1	1	1	1
714	Heater ground harness	805000088	1	1	1	1
716	OVER HEAT SWITCH	105000299	1	1	1	1
717	Water Pressure Connection Harness	805000090	1	1	1	1
718	Freeze protection Thermistor	805000091	1	1	1	1
719	Igniter Ground Harness	105000243	1	1	1	1
720	Guide Seal	809000176	1	1	1	1
800	Screw	109000746	4	4	4	4
801	Screw	CP-30583	2	2	2	2
802	Screw	ZBA0408UK	3	3	3	3
803	Screw	CP-30580	17	17	15	15
804	Screw	109000648	3	3	3	3
805	Screw	109000178	3	3	3	3

ITEM	DESCRIPTION	PART NUMBER	i150S	i120S	i090S	i060S
807	Screw	U217-449	2	2	2	2
808	Screw	109000641	3	3	3	3
810	Screw	109000179	8	8	8	8
811	Screw	108000021	2	2	2	2
813	Screw	ZAD0408UK	2	2	2	2
814	Screw	109000651	6	6	6	6
819	Thermistor Screw	ZFAB0406UK	2	2	2	2
820	Screw	809000177	11	11	11	11
821	Truss Screw	109000598	21	21	21	21
822	Screw	809000178	2	2	2	2
823	Screw	ZAA0408UK	3	3	2	2
824	Screw	809000179	1	1	1	1
825	Grounding Screw	109000793	2	2	2	2
826	Screw	809000180	1	1	1	1
827	Screw	809000181	2	2	2	2
828	Screw	809000182	8	8	8	8
830	Cable clip	809000183	1	1	1	1
860	Wall Bracket	109000628	1	1	1	1
861	Vent Screen Set	108000104	1	1	1	1
862	LP Conversion Orifice-Included	806000055	1	1	1	1
863	Pressure Relief Valve	807000211	1	1	1	1
864	Outdoor Temperature Sensor	805000096	1	1	1	1
888	User Manual	800000114	1	1	1	1
889	Installation and Operation Manual	800000112	1	1	1	1
890	Technical Data Sheet	800000133	1	1	1	1
891	User Manual-French	800000143	1	1	1	1
892	Installation and Operation Manual-French	800000144	1	1	1	1

Rinnai America Corporation continually updates materials, and as such, content is subject to change without notice. For further information, contact Rinnai at 1-800-621-9419 or visit www.rinnai.us