MOEN®

■ **Order by Part Number**

Illustrated Parts

Vichy Posi-Temp®
with Integrel Diverter
Single-Handle Trim

MODEL	FINISH
T2660	Chrome

Handle Extension Kits
(Control and Diverter Kit is required)

Control Handle Kit
96945 Chrome

Diverter Handle Kit
192799 All Finishes

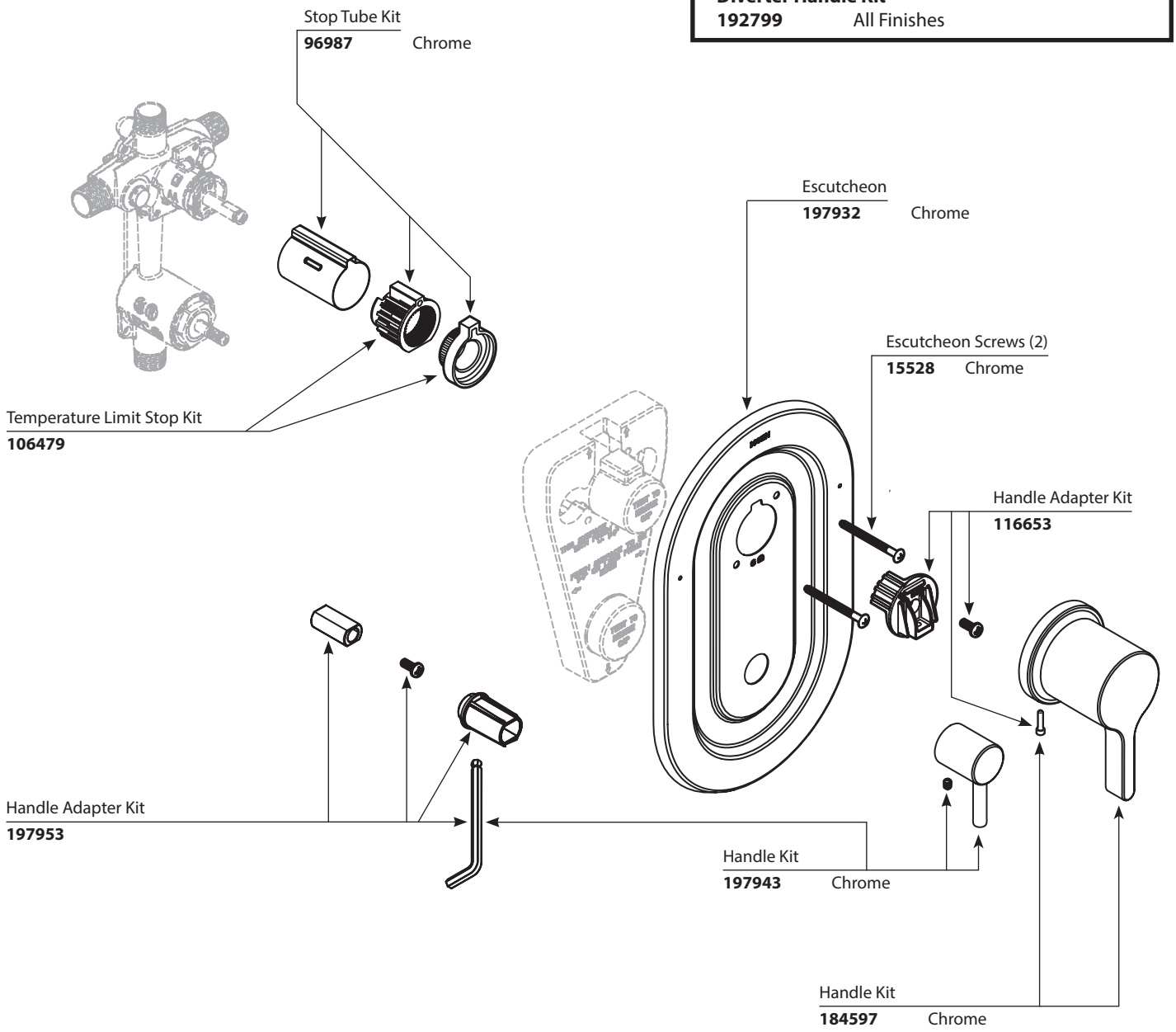

TO ORDER PARTS CALL: 1-800-BUY-MOEN
www.moen.com

05/20/2019 EXP-2352 900003783S7
Released 00