Smart Positioners YT-3400 / YT-3450

Torque motor technology with communications

Design features

- NEW **Enhanced diagnostic** (including offline and online) to fully check the integrity of the system. Valve signature, advanced step tests and Partial Stroke Testing (PST) can be operated from local or remote positions. Device Description (DD) and Device Type Manager (DTM) files allow for full software compatibility.
- **Visual diagnostic info** to NE107 standard for a user-friendly analysis with a severity alarm scale and a clear visual identification locally on the display or remotely through HART®.
- **Digital input/output configurable** depending on the application and customer preferences. Multiple options are available e.g. start a pre-set PST event or receive error alarms, tailoring interaction with the device as necessary.
- **Auto tuning** functionality.
- **Non-contact sensor** for increased performance for high frequency operating valves and an enhanced lifetime.

YT-3400 Aluminium Enclosure



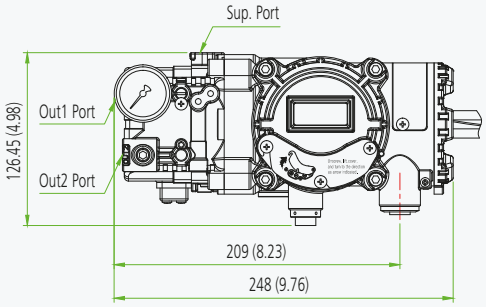

YT-3450 STS316 Enclosure



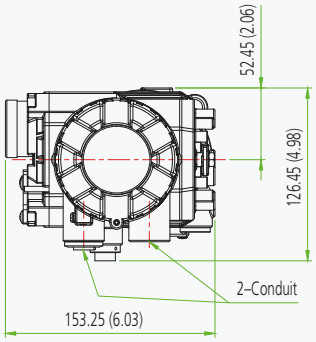

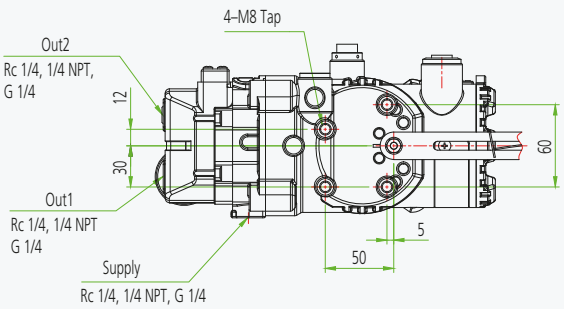

Dimensions: mm (Inches ")

Smart Positioners YT-3400 / YT-3450

Item Type		YT-3400	YT-3450
Input Signal		4-20 mA DC	
Supply Pressure		0.14 to 0.7 MPa / 1.4 to 7 bar / 20 to 102 psi	
Stroke	Linear Type	10 to 150 mm (0.4 to 6")	
	Rotary Type	55 to 110˚	
Impedance		Max. 450 Ω @ 20 mA DC	
Air Connection		Rc ¼, ¼ NPT, G ¼	¼ NPT
Gauge Connection		Rc 1/8, 1/8 NPT	1/8 NPT
Conduit		G ½, ½ NPT, M20	G ½
Operating Temp.	Standard Type	-30 to +85 °C (-22 to +185 °F)	
	Low Temp. Type	-40 to +85 °C (-40 to +185 °F)	
	Arctic Temp. Type*	-55 to +85 °C (-67 to +185 °F)	
	LCD Operating Temp.	withstands -55 to +85 °C (-67 to +185 °F) only visible above -40 °C (-40 °F)	
Linearity		±0.5% F.S.	
Hysteresis		±0.5% F.S.	
Sensitivity		±0.2% F.S.	
Repeatability		±0.3% F.S.	
Air Consumption		Below 2 LPM (sup = O.14 MPa) Below 0.08 CFM (sup = 20 psi)	
Flow Capacity		70 LPM (sup = O.14 MPa) 2.47 CFM (sup = 20 psi)	
Output Characteristics		Linear, EQ%, Quick Open, User Set (5 or 21 Points)	
Material		Aluminium Diecasting	Stainless Steel 316
Ingress Protection		NEMA 4-4X, IP66	
Explosion Protection Type		**ATEX / IECEx / EAC** Ex db IIC T5/T6 Ex tb IIIC T100°C/T85°C **CCC / NEPSI** Ex d IIC T5/T6 Gb Ex tD A21 IP66 T100°C/T85°C **KCs** Ex d IIC T5/T6 IP66 **CSA** Ex db IIC T5 or T6 Class I, Zone 1, AEx db IIC T5 or T6, Class II, Division 1, Groups E, F and G; Ex tb IIC T100°C/T85°C AEx tb IIIC T100°C/T85°C Type 4, 4X ; IP66 **FM** XP/I/1/ABCD/T6 Ta= -40°C to +70°C, T5 Ta= -40°C to +80°C I/1/AEx db/IIC/T6 Ta= -40°C to +70°C, T5 Ta= -40°C to +80°C DIP/II, III/1/EFG/T6 Ta= -40°C to +70°C, T5 Ta= -40°C to +80°C 21/AEx tb/IIIC/T85°C Ta= -40°C to +70°C, T100°C Ta= -40°C to +80°C; IP66 **ECAS** Ex db IIC T5/T6 Gb Ex tb IIIC T100°C/T85°C Db **INMETRO** Ex db IIC T5/T6 Gb IP66 Ex tb IIIC T100°C/T85°C Db IP66	
Communication (Option)		HART (ver.7)	
Weight		3.4 kg (7.5 lb)	7.0 kg (15.4 lb)

Product Code

YT-3400 - L - S - C - 2 - 4 - 2 - 3 - S

Model
YT-3400 = Aluminium housing
YT-3450 = Stainless steel housing

Motion Type
L = Linear
R = Rotary

Acting Type
S = Single
D = Double

Explosion Protection
C[1] = ATEX, IECEx, NEPSI, KCs, INMETRO
E = EAC
A = CSA, FM
AG = CSA, FM - Tapped Exhaust
Z = CCC

Lever Type

Linear	Rotary
1 = 10 to 40 mm	1 = M6 x 34L
2 = 20 to 70 mm	2 = M6 x 63L
3 = 50 to 100 mm	3 = M8 x 34L
4 = 100 to 150 mm	4 = M8 x 63L
	5 = NAMUR

Conduit & Air Connection
1 = G ½ - Rc ¼ (N/A for FM and CCC or YT-3450)
2 = G ½ - ¼ NPT (N/A for FM and CCC)
3 = G ½ - G ¼ (N/A for FM and CCC or YT-3450)
4 = M20 - ¼ NPT (N/A for YT-3450)
5 = ½ NPT - ¼ NPT (N/A for YT-3450)

Communication
0 = None
2 = HART protocol communication
5 = HART with Enhanced Diagnostic Capabilities & DI/DO

Output Options[4]
0 = None
1 = 4-20 mA feedback
2 = Limit switch[2]
3 = 4-20 mA feedback + Limit switch[2]

Operating Temp. (Non-explosion proof)[3]
S = -30 to +80 °C (-22 to +176 °F) (N/A for EAC)
L = -40 to +80 °C (-40 to +176 °F)
A* = -55 to +80 °C (-67 to +176 °F) (EAC only)

Notes:
1. Please put the name of the certificate in a purchase order.
2. Limit Switch (or Digital Output): DC 24V (50mA) and transistor type.
3. This option is just the normal operating temperature of the product and is not related to explosion protection temperature.
   See certificates for explosion protection temperature.
* Arctic temperature range for double acting devices is -52 to +85 °C (-62 to +185 °F).
4. Output Options 2 and 3 are not selectable when Communication option 5 is selected. Communication option 5 includes digital I/O and digital output is configurable to software limit switch.