MOEN®

Specifications

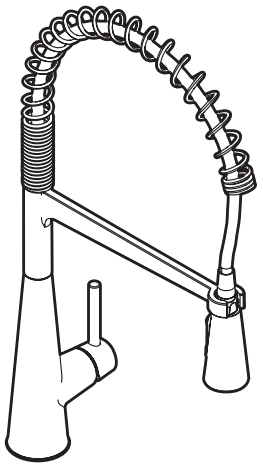

Sleek™
Single Handle Pre-Rinse Spring Pulldown Kitchen Faucet

Model: 5925 series

NOTE: this faucet is designed to be installed through 1 or 3 holes, 1-1/2" (38mm) min. dia.

GREEN UPC ®

FAUCET DESCRIPTION
- Pulldown system offers smooth operation, easy movement and secure docking
- Metal construction with various finishes identified by suffix
- Quick connect installation - Duralock™
- PowerBoost™ spray technology
- Pulldown spray with 68" braided hose
- Flexible supply lines with 3/8" compression fittings
- High arc spout provides height and reach to fill or clean large pots while pulldown wand provides the maneuverability for cleaning or rinsing
- Faucet designed for handle to be mounted on right side

OPERATION
- Lever style handle
- Temperature controlled by 100˚ arc of handle travel
- Operates with less than 5 lbs. of force
- Operates in stream or spray mode in the pullout or retracted position

FLOW
- Flow is limited to 1.5 gpm (5.7 L/min) max at 60 psi

CARTRIDGE
- 1255™ Duralast™ cartridge for single handle faucets

STANDARDS
- Third party certified to IAPMO Green, ASME A112.18.1/CSA B125.1 and all applicable requirements therein including NSF 61/9 & 372
- Meets CalGreen and Georgia SB370 requirements
- Complies with California Proposition 65 and with the Federal Safe Drinking Water Act
- The backflow protection system in the device consists of two independently operating check valves, a primary and a secondary which prevent backflow
- ADA for lever handle

WARRANTY
- Lifetime limited warranty against leaks, drips and finish defects to the original homeowner
- 10 year limited warranty when used in a multifamily installation
- 5 year limited warranty when used in a commercial installation

Visit www.moen.com/support for complete details and limitations

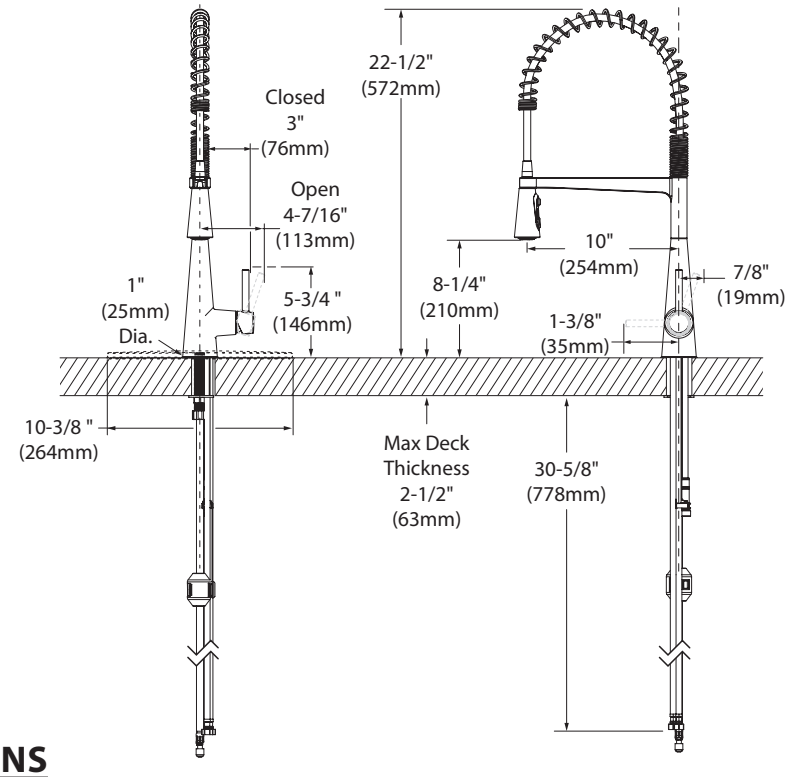

CRITICAL DIMENSIONS

(DO NOT SCALE)

FOR MORE INFORMATION CALL: 1-800-BUY-MOEN
www.moen.com

07/17/2020 SPC-19662 5000004/2024
Released 1/10