Café™ 36" Smart All-Gas Commercial-Style Range with 6 Burners (Natural Gas)

CGY366P2TS1 / CGY366P3TD1 / CGY366P4TW2

CAFÉ

DISTINCT BY DESIGN™

ALSO AVAILABLE IN

CGY366P2TS1
Stainless Steel with Brushed Stainless handle and knobs

CGY366P3TD1
Matte Black with Brushed Stainless handle and knobs

ADA COMPLIANT

FEATURES & BENEFITS

Versatile Cooktop - The versatile cooktop on this commercial-style range features an entire arsenal of burners that give you the right amount of heat and control to perfectly cook anything from delicate sauces to expertly seared meats.

Gas Caterer Oven - A large 6.2 cu ft. capacity oven fits a full-size catering pan and has three racks, a Gas Bake and Dual Power Broil system for even heating and Precision Oven modes to help guarantee results for meals of any size.

Color-Matched Manifold with LCD Control - Get a coordinated look with a manifold that matches the range's finish and an LCD control panel that provides information like oven and probe temperatures and cooking time for perfect cooking results.

Superior Heat Distribution - The industry-exclusive Inspiral burner swirls the cooktop flame under cookware to more evenly spread heat from the center to the edges.

Multi-Ring Burner - A versatile burner offers different-sized flame rings on a single burner element, so it's like having multiple burners in one.

Two Griddle Burners - Cook more at once with two 12,000-BTU powerful burners that can be used together or separately with an optional griddle grill accessory.

Two High-Heat Burners - Boil water quickly with two 18,000-BTU Power Boil burners that give you more cooking power.

Precision Temperature Probe - An innovative temperature probe that helps you achieve the perfect level of doneness for oven favorites.

Three Baking Racks - Cook more at once with two low-profile racks and one partially extended rack, which is made from highly durable nickel.

WIFI-ENABLED FEATURES

Built-in WiFi - This smart oven features WiFi connection so you can control oven functions with the SmartHQ app on your smart device.

Precision Oven Modes - Simplify the cooking process with precision oven modes that automatically track progress, make time and temperature adjustments, and work with the SmartHQ™ app.

Enhanced Shabbos Mode – The Shabbos Keeper connects to your range to automatically enable Shabbos compatible modes each week and before every holiday (Shabbos Keeper sold separately, visit www.zmantechnologies.com for details). WiFi connection via the SmartHQ app required for initial setup.

FEATURES

Configuration	6 Burners
Cooking Technology	Convection
Oven Cleaning Type	Steam Clean
Burner - Left Front	21,000 BTU Multi-ring Burner
Burner - Left Rear	18,000 BTU
Burner - Right Front	10,000 BTU
Burner - Right Rear	18,000 BTU
Burner - Center	12,000 BTU Front / 12,000 BTU Rear
Cooktop Burner Type	Sealed
Cooktop Surface	Porcelain-Enamel Gray
Dishwasher Safe Knobs	Yes
Control Location	Front controls
Control Type	Digital Temperature Display Knob with Timer Display
Valves (Degree of Turn)	270
WiFi-Enabled Features	Remote Oven Control Remote Notifications Scan-to-Cook Voice Control Precision Cooking Modes Meat Probe (App-Based func)
Connected Integrations	Amazon Alexa DiGiorno Drop IFTTT Innit Sonos The Google Assistant
Range Control Features	Audible Preheat Signal Auto Oven Shut-Off with Override Auto Self Clean Chef Connect Delay Clean Option Electronic Timer Front Controls In-Oven Broiling Temperature Probe Sabbath Mode: Shabbos Keeper required, sold separately
Oven Cooking Modes	Convection Bake Multi/Single Rack Convection Roast Proof Warming
Cooktop Burner Grate Features	Continuous Grates Heavy-Cast Edge-to-Edge Grates
Cooktop Burner Grate Material	Heavy Cast
Cleaning Time	Variable
Oven Rack Features	1 Nickel Roller Rack 2 Flat Nickel Racks 5 Rack Positions
Fuel Type	Natural Gas (factory set)
Ignition System	Electronic w/Auto Reignition
Leveling System	4 Leveling Legs
Style	Commercial
Cooking System	Convection with Reverse Air

CAPACITY

Total Capacity (cubic feet)	6.2 cu ft

ACCESSORIES

LP Conversion Kit	Included WB28X39728: High Altitude Natural Gas WB28X39729: High Altitude LP
Backsplash	UX12B36PSS: 12" backsplash UXADJB36PSS: 36" backsplash with shelf
Toe Kicks	CXPR6TKPMWS: 36" Matte White Toe Kick CXPR6TKPMDS: 36" Matte Black Toe Kick CXPR6TKPMSS: 36" Stainless Steel Toe Kick
Griddle	UXPRRGG: Reversible grill/griddle

Café™ 36" Smart All-Gas Commercial-Style Range with 6 Burners (Natural Gas)

CGY366P2TS1 / CGY366P3TD1 / CGY366P4TW2

CAFÉ

DISTINCT BY DESIGN™

WEIGHTS & DIMENSIONS

Depth with Door Open	48-1/4 in
Approximate Shipping Weight	462 lb
Net Weight	417 lb
Overall Height	35-1/4 in
Height to Cooking Surface (in.)	35-1/4 - 36-3/4
Overall Width	35-7/8 in
Cabinet Width	36 in
Overall Depth	31-1/8 in
Depth Without Handle	29-3/8 in
Oven Interior Dimensions (W x H x D) (in.)	28-1/4 x 16-3/8 x 19

APPEARANCE

Color Appearance	Matte White
Cooktop Burner Grate Color	Matte Black
Oven Door Features	Big Clear View Oven Window
Handle Design	Café Pro
Control Knobs	Brushed Bronze Consumer Removable Dishwasher Safe Commercial-Style

POWER / RATINGS

Top Burner BTU Rating - LP (000's BTU's)	(1) 18.0; (2) 15.0; (2) 12.0; (1) 9.1
Top Burner BTU Rating - Nat. Gas (000's BTU's)	(1) 21.0; (2) 18.0; (2) 12.0; (1) 10.0
Volts/Hertz/Amps	120v; 60Hz; 15A
Bake/Broiler BTU Rating - LP (000's BTU's)	21.5 Bake / 16.0 Broil
Bake/Broiler BTU Rating - Nat. Gas (000's BTU's)	23.5 Bake / 18.0 Broil

WARRANTY

Parts warranty	Limited 1-year entire appliance
Labor warranty	Limited 1-year entire appliance
Warranty notes	See written warranty for full details

DIMENSIONS AND INSTALLATION

Electrical Requirements: Ranges must be hooked up to a 120V, 60Hz properly grounded dedicated circuit protected by a 15-amp circuit breaker or time-delay fuse.

Gas Pressure Regulator: You must use the gas pressure regulator supplied with this range. For proper operations the inlet pressure to the regulator should be as follows:

Natural Gas:
Minimum pressure: 6” of Water Column
Maximum pressure: 13” of Water Column

Propane (LP) Gas:
Minimum pressure: 11” of Water Column
Maximum pressure: 13” of Water Column
See installation instructions for more detail

Optional Backsplash Accessories: The range requires a 12" minimum clearance to a vertical combustible surface at the rear. A backsplash is required for installations with less than 12" clearance. The following backsplash accessories are available, or a custom, non-combustible backsplash can be used.

Order one with a 36"-wide range backsplash
UX12B36PSS – 12" backsplash
UXADJB36PSS – 30"-36" adjustable-height backsplash with warming shelf

NOTE: Commercial-style ranges offer a number of choices in size and cooktop configurations. All commercial-style ranges are factory set for natural gas.Conversion kits are included with the range. High Altitude kit, High Altitude Natural Gas: WB28X39728; High Altitude LP: WB28X39729 are also available. The kits must be installed by a qualified service technician at additional cost.

Installation Information: Before installing, consult installation instructions packed with product or online at geappliances.com for current dimensional data.

A suitable 36" or wider vent hood is required for installation over ranges with a grill and recommended for all other ranges.

Advance Planning: Refer to dimensional drawings for appropriate placement and necessary clearances when planning the installation.

- Working areas adjacent to the range should have 18" minimum clearance between countertop and cabinet bottom.
- Clearance between range and side wall or combustible material must be at least 12" on each side.
- Installation must conform with local codes. In the absence of local codes, the range must comply with the National Fuel Gas Code, ANSI Z223.1-1990.

WARNING: Installations without a hood require 60" minimum to combustibles. A custom hood installation with exposed horizontal combustible surfaces must have an Auto-On feature. Refer to hood installation instructions for specific hood clearances.

The surface of the entire back wall above the range and below the hood must be covered with a non-combustible material such as metal, ceramic tile, brick, marble or other stone.

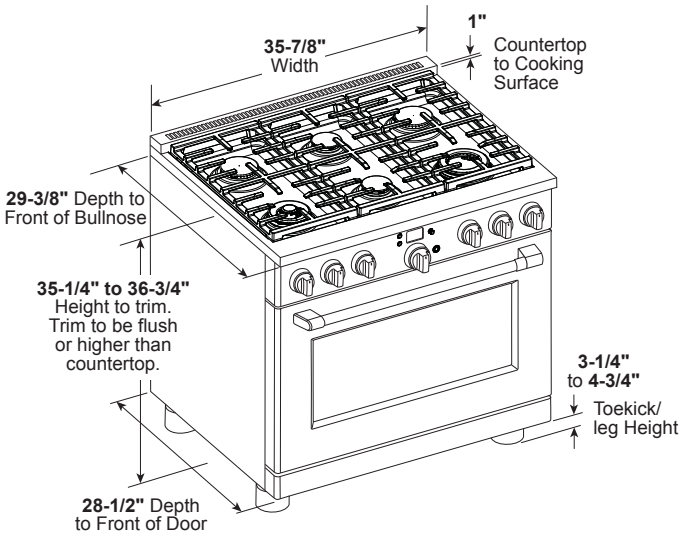

Café™ 36" Smart All-Gas Commercial-Style Range with 6 Burners (Natural Gas)

CGY366P2TS1 / CGY366P3TD1 / CGY366P4TW2

CAFÉ

DISTINCT BY DESIGN™

UTILITY LOCATIONS

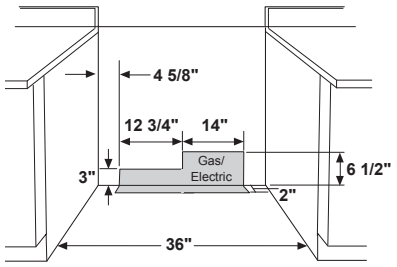

SIDE VIEW WITH BACKSPLASH

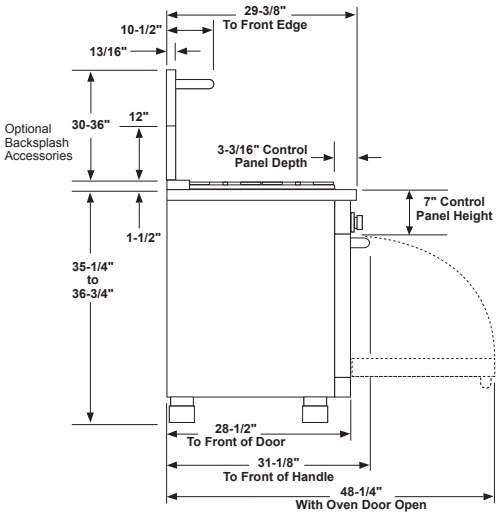

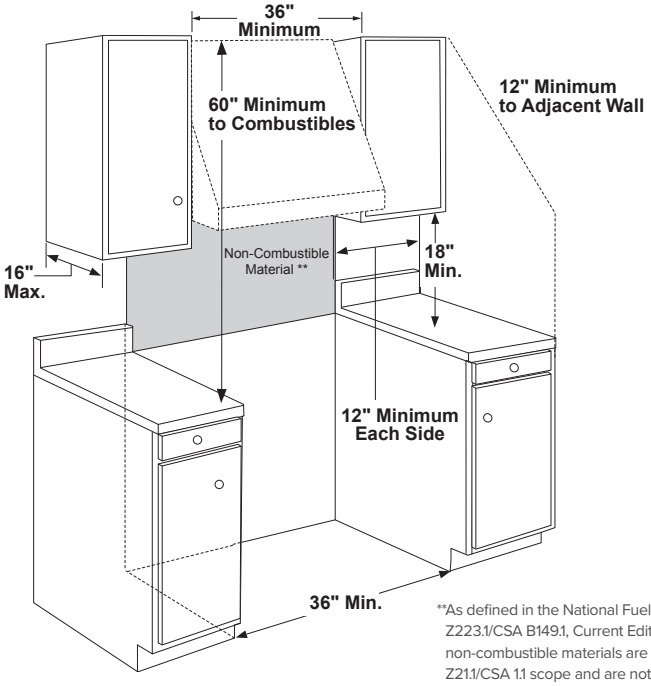

**As defined in the National Fuel Gas Code (ANSI Z223.1/CSA B149.1, Current Edition). Clearances from non-combustible materials are not part of the ANSI Z21.1/CSA 1.1 scope and are not certified by CSA. Clearances less than 12" must be approved by local codes and/or the authority having jurisdiction.

ADDITIONAL CLEARANCES

Allow 12" minimum clearance to an adjacent wall on each side. Working areas adjacent to the rangetop should have 18" minimum clearance between countertop and the bottom of the wall cabinet.

ADDITIONAL ACCESSORIES

CXPR6HKPTBZ
Brushed Bronze
1 handle, 8 knobs
(standard on Matte White)

CXPR6HKPTSS
Brushed Stainless
1 handle, 8 knobs
(standard on Matte Black)

CXPR6HKPTBT
Brushed Black
1 handle, 8 knobs

CXPR6HKPTCU
Brushed Copper
1 handle, 8 knobs

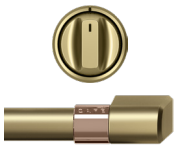

CXPR6HKPTCG
Brushed Brass
1 handle, 8 knobs

CXPR6HKPTFB
Flat Black
1 handle, 8 knobs

UXADJB36PSS
30"-36"H Stainless Steel
Adjustable Height
Backsplash with Shelf

UX12B36PSS
12"H Stainless Steel
Backsplash

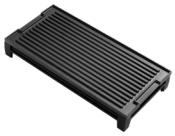

UXPRRGG
Grill/Griddle Accessory

CXPR6TKPMWS
Matte White Toe Kick

CXPR6TKPMDS
Matte Black Toe Kick

CXPR6TKPMSS
Stainless Steel Toe Kick

For answers to your Café™ product questions, visit our website at cafeappliances.com.

© 2022 GE Appliances 8/22