56" BOYCE ACRYLIC FREESTANDING TUB

Product Code: SH112074AWH

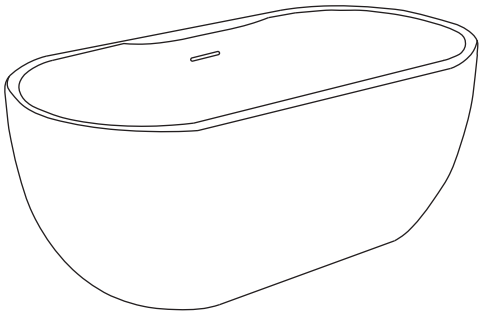

Product Features

- Material: Acrylic
- Product Finish: White
- Shape: Oval
- Drain Location: Center Rear
- Drain Included: Yes - White
- Integral Drain & Overflow
- Adjustable feet to ensure level installation
- Deck allows for tub filler installation
- Access panel for easy filler installation

Product Dimensions

- Overall size: 55-5/8" x 29" x 23-5/8"
- Water Capacity to overflow: 49.92 gallon (189L)
- Depth to overflow: 14-3/8"
- Tub Weight (lbs): 90.39 lbs

Optional Accessories

- Foam Insulation
- Quick Connect Drop-In Drain Kit: SH653PVC
- Special Finish Drain Caps: SH439071xx

Codes and Certifications

- CSA B45.5-22/IAPMO Z124-2022, Massachusetts Accepted

Finish Options

- BG - Brushed Gold
- BN - Brushed Nickel
- CP - Chrome
- MB - Matte Black
- ORB - Oil Rubbed Bronze
- PB - Polished Brass
- PN - Polished Nickel

Revised: 02/23/2026

56" BOYCE ACRYLIC FREESTANDING TUB

Product Code: SH112074AWH

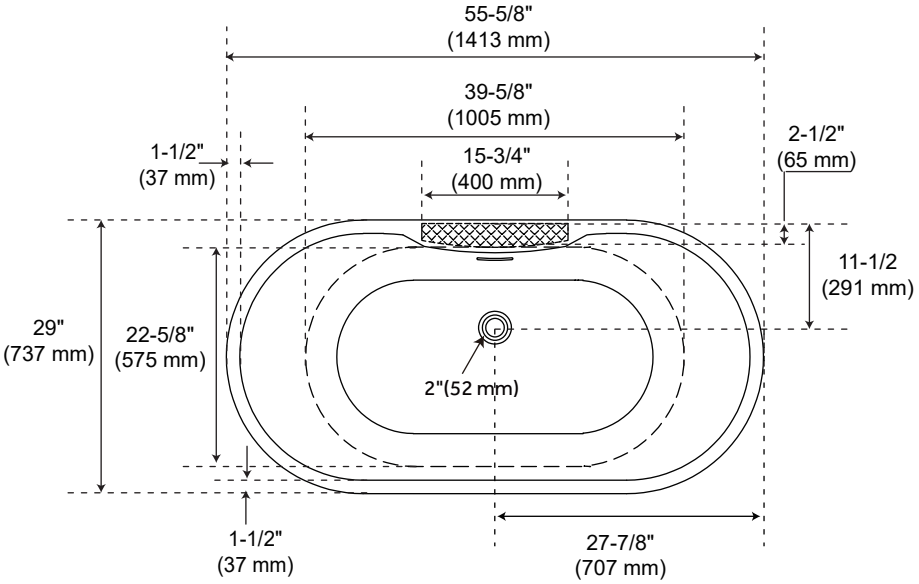

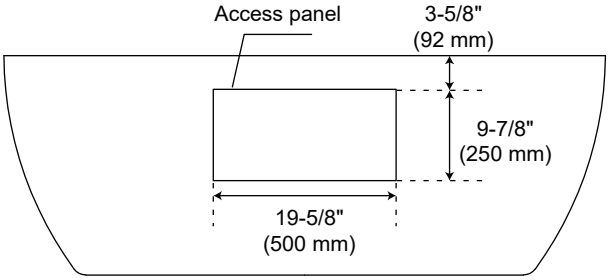

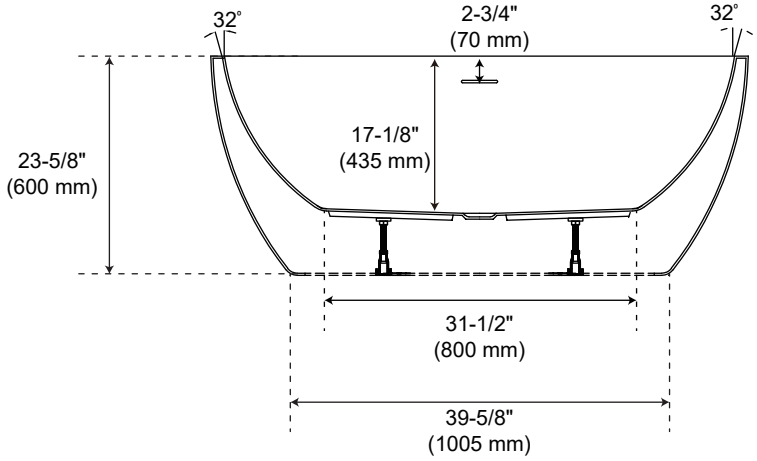

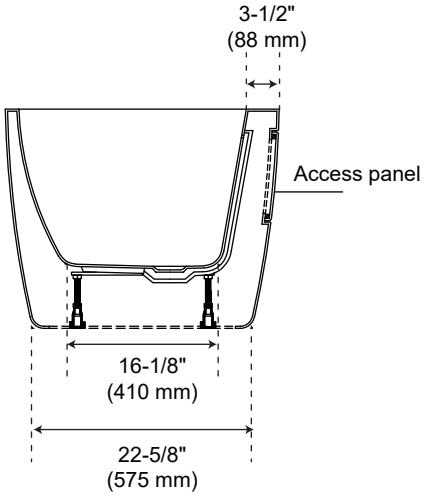

All dimensions and specifications are nominal and may vary. Use actual products for accuracy