Specifications

PFXC5552
SCOVIN SINGLE HANDLE PULL-DOWN KITCHEN FAUCET

Product Features

- Ceramic disc cartridge
- Metal lever handle
- Single hole sink installation
- Max. flow rate: 1.8 gpm (6.8L/min) at 60 psi
- Two-function sprayer: stream and aerated spray
- Lifetime limited warranty
- Meets ASME A112.18.1
- NSF 61 compliant
- cUPC/IAPMO listed

PFXC5552CP

Model Numbers

PFXC5552CP	Chrome
PFXC5552ZBN	PVD brushed nickel
PFXC5552MB	Matte black

Optional Parts

0BPF121010910004* 8"deck plate

Product Specifications

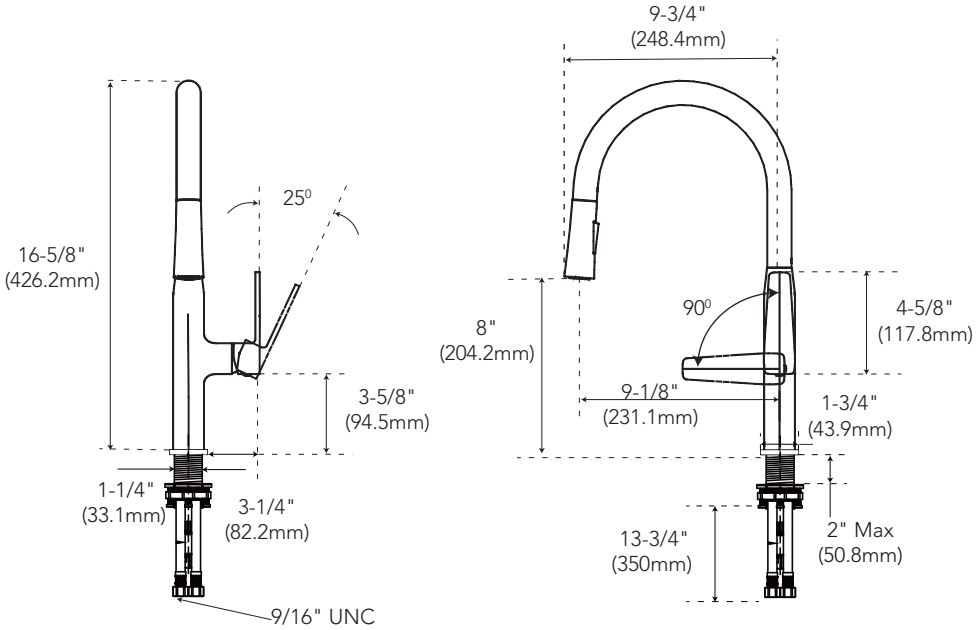

* All measurements are nominal. Please verify before actual installation.

Warranty and Codes

This product comes complete with installation, operating, care and maintenance instructions. This PROFLO faucet carries a limited lifetime warranty when installed in residential applications. The warranty is five years in commercial applications. This product meets ASME: A112.18.1. *Compliant with lead content requirements of US Senate Bill S.3874*

©2022 Ferguson Enterprises, LLC. FG 03/2022

FERGUSON.COM/PROFLO