MOEN®

Specifications

DESCRIPTION
- Metal construction with various finishes identified by suffix
- For use with S3600 3/4" volume control valve

OPERATION
- Lever style handle operation

CARTRIDGE
- 130157 volume ceramic disk cartridge design

STANDARDS
- Third party certified to meet ASME A112.18.1/CSA B125.1, and all applicable requirements referenced therein
- **ADA** for lever handle

WARRANTY
- Lifetime limited warranty against leaks, drips and finish defects to the original homeowner
- 10 year limited warranty when used in a multifamily installation
- 5 year limited warranty when used in a commercial installation

Visit www.moen.com/support for complete details and limitations

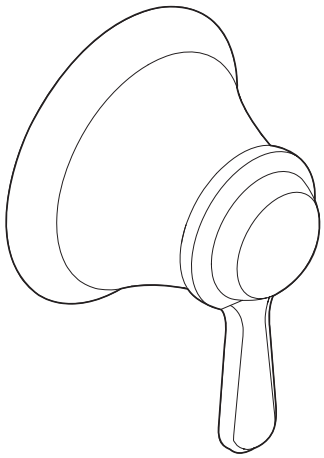

COLINET™
Single Function Flow Valve Trim

Models: TS44402 series

Valve: S3600 (sold separately)

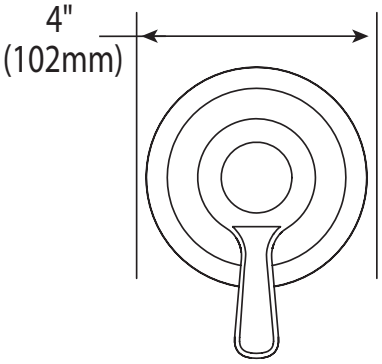

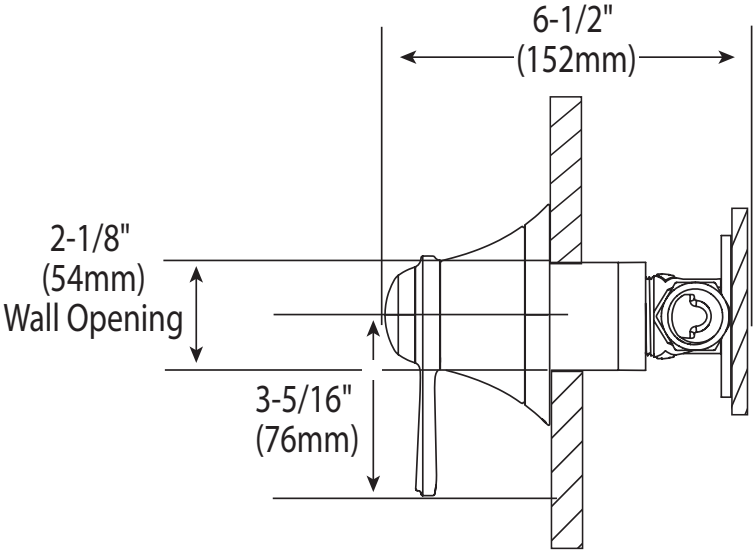

M•pact System

CRITICAL DIMENSIONS
(DO NOT SCALE)

FOR MORE INFORMATION CALL: 1-800-BUY-MOEN
www.moen.com