Talis E
Widespread Faucet 150 with Pop-Up Drain, 1.2 GPM
Finishes : **matte black** Part no. : **71733671**

Description

Features

- Aerated spray
- Flow: 1.2 GPM (4.5 L/Min)
- 90° ceramic valves
- Includes pop-up drain
- MASS/Massachusetts
- NSF61-372/NSF/Kennzeichnung NSF®61-372
- DOE/FTC
- TECQ/Texas Registered
- CEC/California/Watersaving
- WaterSense/IAPMO/5921/Lavs
- EPA Watersense Lav/CSA Group/6850-81

Technology

Eco Right
Quick Clean
Comfort Zone

Compliance

WaterSense Meets EPA Criteria Certified by IAPMO R&T
UPC C ®

Product image
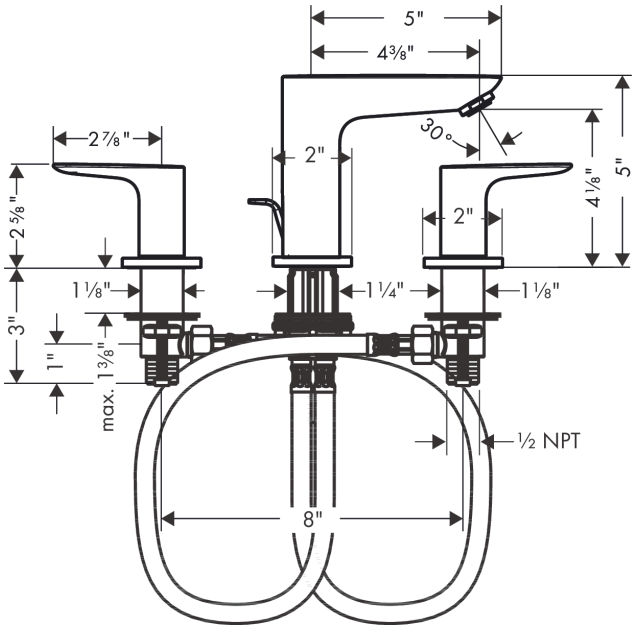
Scale drawing