MOEN®

Specifications

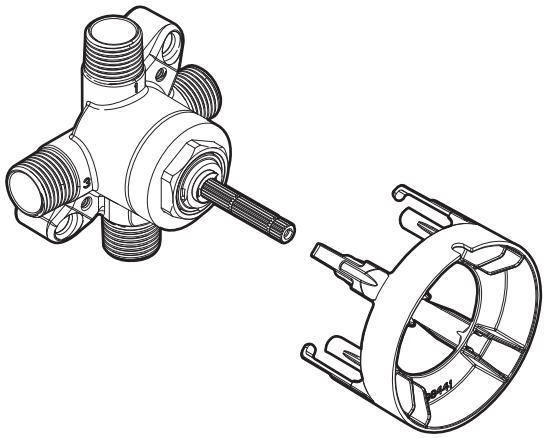

M-CORE™
2 or 3 Independent Function Transfer Valve

Model	Connection
U231CI	CC IPS
U231X	PEX
U231CX	Cold Expansion PEX

DESCRIPTION
- Brass Construction
- 2 Function / 3 Function Transfer Valve
- ½" CC/IPS , PEX and Cold Expansion PEX Connections

OPERATION
- Detents at each flow position
- The valve is factory set for 2 independent showering devices but can be adjusted to accommodate 3 independent showering devices

CARTRIDGE
- Ceramic disk cartridge

STANDARDS
- Third party certified to meet ASME A112.18/CSA B125.1 and all applicable requirements therein
- **ADA** for lever handle

WARRANTY
- Lifetime limited warranty against leaks, drips and finish defects to the original homeowner
- 10 year limited warranty when used in a multifamily installation
- 5 year limited warranty when used in a commercial installation

Visit www.moen.com/support for complete details and limitations

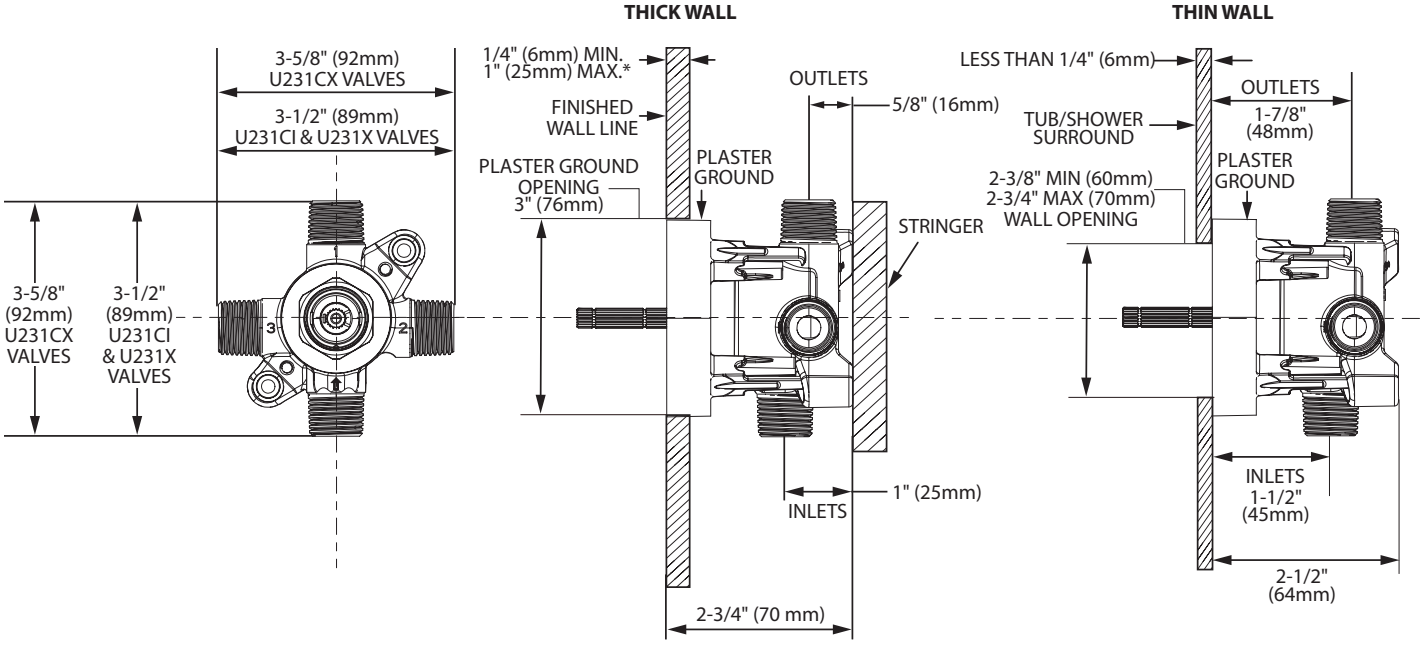

* Walls thicker than 1" (25mm) require optional extension kit.

CRITICAL DIMENSIONS

(DO NOT SCALE)

FOR MORE INFORMATION CALL: 1-800-BUY-MOEN
www.moen.com