DURASTAR™

SUBMITTAL COVER SHEET

PROJECT NAME _____

LOCATION _____

ARCHITECT _____

ENGINEER _____

CONTRACTOR _____

SUBMITTED BY _____ **DATE** _____

UNIT SUMMARY

Quantity						
Unit Designation						
Model No.						
Total Cooling						
Sensible Cooling						
Air Ent. Evaporator						
Air Lvg. Evaporator						
Heating Input						
Heating Output						
CFM/ESP						
EER/SEER						
Electrical						
Minimum Ampacity						
Min.–Max. Breaker						
Net Unit Weight						
Accessory						
Catalog Form Number						

ACCESSORIES

NOTES

UPFLOW/HORIZONTAL TWO-STAGE
DR80UAT SERIES GAS FURNACE
80% A.F.U.E.†
Input Rates 50 to 150 kBTU [14.7 to 44 kW]

JOB NAME _____ MODEL NO. _____

CONTRACTOR _____ OUTDOOR UNIT MODEL NO. _____

ENGINEER _____ LOCATION _____

SUBMITTED FOR ☐ APPROVAL ☐ RECORD ORDER NO. _____

DATE _____

UNIT DATA

HEATING PERFORMANCE

TOTAL CAPACITY INPUT* ..... _____ MBH [kW]

TOTAL CAPACITY OUTPUT*..... _____ MBH [kW]

DESIGN TEMP. RISE ..... _____ °F [°C] DB

AFUE ..... _____ %

CALIFORNIA SEASONAL EFFICIENCY ..... _____ %

(*uses blower motor heat)

SUPPLY AIR BLOWER PERFORMANCE

TOTAL AIR SUPPLY ..... _____ CFM [L/s]

TOTAL RESISTANCE EXTERNAL TO UNIT..... _____ IWG

BLOWER SPEED ..... _____ RPM

POWER OUTPUT REQUIREMENT .... _____ BHP

MOTOR RATING ..... _____ HP [W]

POWER INPUT REQUIREMENT ..... _____ kW

ELECTRICAL DATA

POWER SUPPLY ..... _____ Hz

TOTAL UNIT AMPACITY..... _____ AMPS

MINIMUM WIRE SIZE ..... _____ AWG

MAXIMUM OVERCURRENT DEVICE FUSES/HACR BREAKER ..... _____ AMPS

ISO 9001:2015

Dual Fuel The Choice Is Yours

AHRI CERTIFIED www.ahridirectory.org

CSA CERTIFIED

DESIGN CSA CERTIFIED

FEATURES FOR DR80UAT UPFLOW/HORIZONTAL

- 80% residential Gas Furnace CSA certified
- Two stages of operation to save energy and maintain optimal comfort level.
- Constant Torque Electrically Commutated Motor
- 3 way multi poise design UF / HZ
- Diagnostics – 7 Segment LED all units
- Ignition System – Direct Spark Ignition for reliability and longevity
- Heat exchanger is removable for improved serviceability. Aluminized steel construction provides maximum corrosion resistance and thermal fatigue reliability.
- Solid doors provide quiet operation
- Solid bottom included
- Low profile 34" cabinet ideal for space constrained installations
- Blower shelf design – serviceable in all furnace orientations
- Hemmed edges on cabinets and doors
- 1/4 turn door knobs for tool less access
- Integrated Control board features dip switches for easy system set up
- QR codes for quick access to product information from your smart phone or tablet

FIELD INSTALLED ACCESSORIES

External Bottom Filter Rack RXGF-CB ..... ☐

External Side Filter Rack RXGF-CD ..... ☐

Indoor Coil Casing RXBC-D14A1 ..... ☐

Indoor Coil Casing RXBC-D17A1 ..... ☐

Indoor Coil Casing RXBC-D21A1 ..... ☐

Indoor Coil Casing RXBC-D21B1 ..... ☐

Indoor Coil Casing RXBC-D24A1 ..... ☐

Solid Bottom Kit RXGB-D14 ..... ☐

Solid Bottom Kit RXGB-D17 ..... ☐

Solid Bottom Kit RXGB-D21 ..... ☐

Solid Bottom Kit RXGB-D24 ..... ☐

Horizontal Application

WARNING

THIS FURNACE IS NOT APPROVED
OR RECOMMENDED FOR INSTALLATION
ON ITS BACK, WITH ACCESS DOORS
FACING UPWARDS.

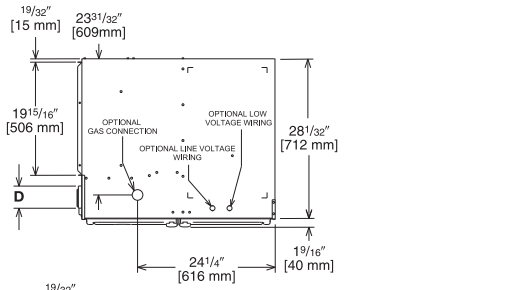

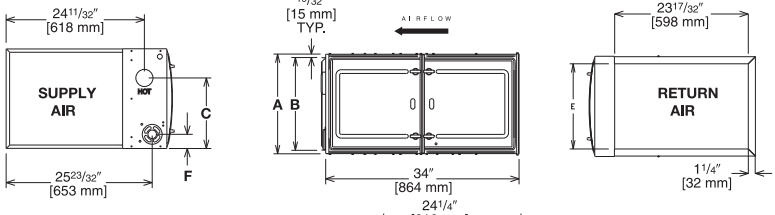

Upflow Application

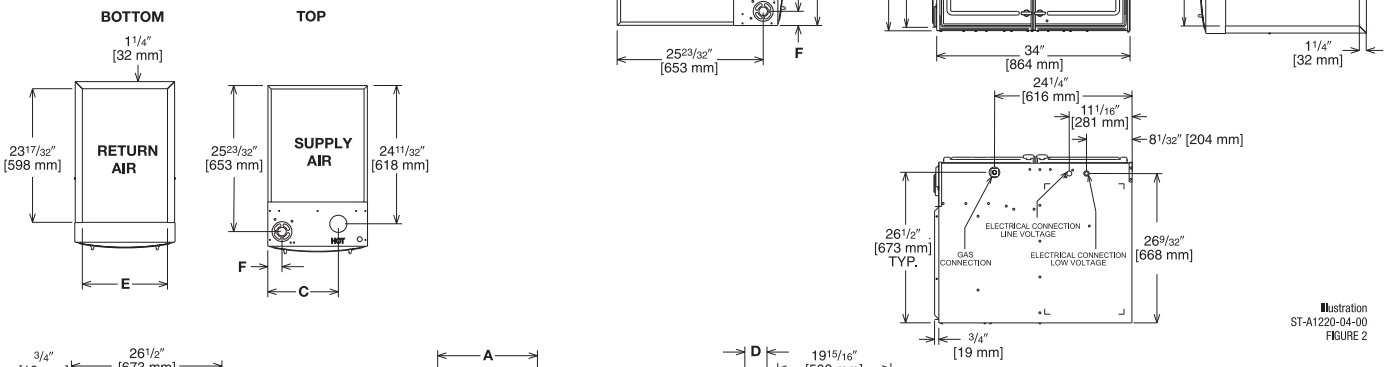

Illustration
ST-A1220-04-00
FIGURE 1

Illustration
ST-A1220-04-00
FIGURE 2

Unit Dimensions

MODEL DR80UAT	A	B	C	D	E	F	MINIMUM CLEARANCE (IN.)						SHIP WGTS. (LBS.)
							LEFT SIDE	RIGHT SIDE	BACK	TOP	FRONT	VENT	
050	14	12 27/32	10 5/8	①	11 1/2	1 7/8	0	4 ②	0	1	3	6 ③	110
075/ 100417	17 1/2	16 11/32	12 3/8	①	15	2 1/2	0	3 ②	0	1	3	6 ③	125
100521	21	19 27/32	14 1/8	①	18 1/2	2 1/2	0	0	0	1	3	6 ③	140
125	24 1/2	23 11/32	15 7/8	①	22	2 1/2	0	0	0	1	3	6 ③	150
150	24 1/2	23 11/32	15 7/8	①	22	2 1/2	0	0	0	1	3	6 ③	160

NOTES: ① May require a 3" [76 mm] to 4" [102 mm] or 3" [76 mm] to 5" [127 mm] adapter. 4" adapter included with (-)802P units.
② May be 0" [0 mm] with type B vent.
③ May be 1" [25 mm] with type B vent.
Furnaces must be vented in accordance with the National Fuel Gas Code, ANSI Z223.1 and/or Can/CGA-B149 Installation Codes and in accordance with local codes.

[ ] Designates Metric Conversions

Before proceeding with installation, refer to installation instructions packaged with each model, as well as complying with all Federal, State, Provincial, and Local codes, regulations, and practices.

DURASTAR™

"In keeping with its policy of continuous progress and product improvement, Manufacturer reserves the right to make changes without notice."

PRINTED IN U.S.A. 1-21 QG FORM NO. XDS-1586 REV. 1