NIRON CLIMA SOCKET FUSION FITTING

INSTAHEADER PEX ADAPTER (CRIMP RING - ASTM F 1807)

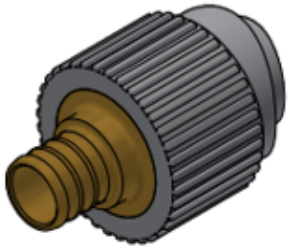

ITEM	27NPGSCR
SIZE RANGE	1¼" x ½" (40 mm x ½") ÷ 12" x 1" (315 mm x 1")
SDR	7.4
FUSION RANGE	For Socket Fusion - SDR7.4 and up
MATERIAL	Material shall be β-crystalline PP-RCT and solid grey in color having a cell classification of PP0220B56832 according to ASTM F4101 and shall be coextruded with a POWERCORE middle layer containing added fiberglass + Brass
COLOR	Steel Grey

INSTALLATION INSTRUCTIONS

Socket fusion - Socket Fusion in accordance with DVS 2207, ASTM D2657 and NUPI Niron Installation Manual

LISTINGS:

NSF PW; ANSI/NSF 14; ANSI/NSF 61; ANSI/NSF 51; UPC; IPC; IAPMO; ICC-ES; CAN/UCL S102; CAN/UCL S115*

STANDARDS:

ANSI/NSF 14; ANSI/NSF 61; ASTM F2389; ASTM F2023; CSA B137,11; ASTM E-84****; CAN/ULC S102****; NSF 51; ISO 15874

MAXIMUM OPERATING PRESSURE

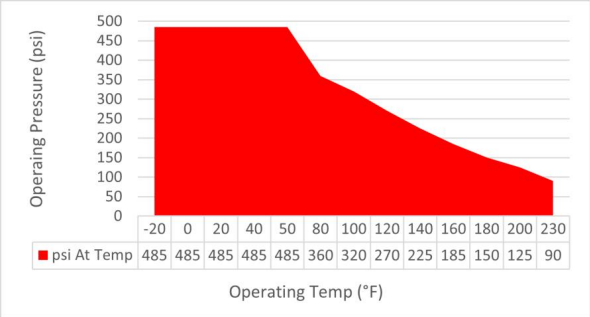

For code or standard question pertaining to NIRON CLIMA Pipe and Fittings, contact Nupi Americas.

PRODUCT INFORMATION AND APPLICATION USE

Niron Socket Fusion Fittings are designed to be joined by means of heat element socket fusion in accordance with the above listed installation instructions. Fittings are manufactured with imbedded sockets on each side which are of a tapered inteference fit. The dimensions of the fittings and sockets are in accordance with the requirements of ASTM F2389. The fittings are designed with sufficient thickness to exceed the pressure ratings of the thickest NIRON commercially available pipe and can be used to join to a Niron pipe of any thickness. Fittings are unitary and injection molded and are solid grey in color.

MANUFACTURER'S WARRANTY

Thirty (30) Years from the date of sale upon successful completion of pressure test of the piping system (refer to published warranty for complete details).

NOTE:

* For unexposed service only with CAN/UCL S115 listed 1" thick fiberglass insulation.

** More information can be found on NIRON TECHNICAL CATALOGUE.

*** Weld Depth (WD) is the insertion depth of the pipe for socket fusing.

**** For Niron pipe and fittings to meet E-84 and/or CAN/ULC S102.2 for installation in a plenum application, it must be covered with a minimum of 1" or greater E-84 fiberglass insulation.

***** Technical Data may undergo dimensional changes, check revision at the top.

****** The actual pressure ratings of Niron PP-RCT socket fusion fittings meet or exceed the pressures indicated in the graph, which are for SDR 7.4 PP-RCT pipe.

© 2024 - **NUPI AMERICAS Inc** protects all ovs the world its industrial anc intellectual property rights and pursues their undue use
314 Commerce Parkway - Early Branch, SC 29916 Phone: 813-398-3579 - Fax: 813-398-3639 - Mail: info@nupiamericans.com

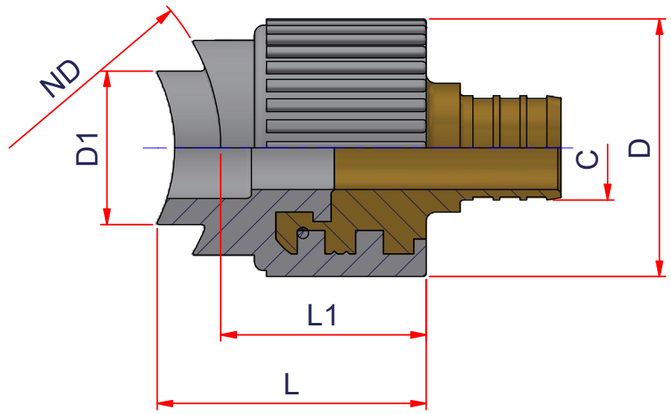

CODE	Weight lbs/pc	Volume ft³/pc	ND	C (IPS)	D1	D	L1	L
27NPGSCR124050	0.22	0.0032	1 1/4" => 40 mm 1 1/2" => 50 mm	1/2"	0.98	1.46	1.24	1.77
27NPGSCR126375	0.22	0.0031	2" => 63 mm 2 1/2" => 75 mm	1/2"	0.98	1.46	1.24	1.65
27NPGSCR1290110125	0.22	0.003	3" => 90 mm 3 1/2" => 110 mm 4" => 125 mm	1/2"	0.98	1.46	1.24	1.61
27NPGSCR344050	0.317	0.0043	1 1/4" => 40 mm 1 1/2" => 50 mm	3/4"	0.98	1.65	1.32	1.85
27NPGSCR346375	0.318	0.0041	2" => 63 mm 2 1/2" => 75 mm	3/4"	0.98	1.65	1.32	1.73
27NPGSCR3490110125	0.317	0.004	3" => 90 mm 3 1/2" => 110 mm 4" => 125 mm	3/4"	0.98	1.65	1.32	1.69
27NPGSCR5890110125	0.221	0.003	3" => 90 mm 3 1/2" => 110 mm 4" => 125 mm	5/8"	0.98	1.46	1.24	1.6
27NPGSCR16375	0.624	0.0082	2" => 63 mm 2 1/2" => 75 mm	1"	1.26	2.13	1.5	2.05
27NPGSCR190110125	0.624	0.008	3" => 90 mm 3 1/2" => 110 mm 4" => 125 mm	1"	1.26	2.13	1.5	1.97
27NPGSCR1160200	0.613	0.0076	6" => 160 mm 8" => 200 mm	1"	1.26	2.13	1.5	1.85

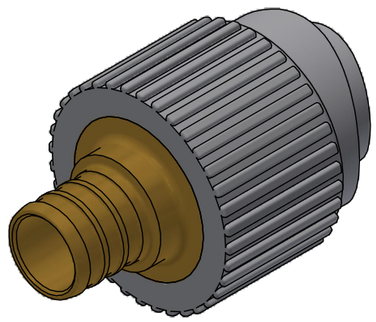

NIRON

nupi AMERICAS

ITEM: NPGSCR

C:\Vault_Temp\Disegni\Schede Tecniche\Niron Grey inches\Socket Fusion Fittings\NI10304.dwg

DESC: INSTAHEADER PEX ADAPTER (CRIMP RING - ASTM F 1807) FUSION WELDING SOCKLET

DRAWING No: NI10304

SHEET OF 1 1

REV. -2

www.nupiamericas.com - info@nupiamericas.com

All dimensions have to be considered in inches with 5% tolerance if not otherwise mentioned exclusing values as per standard ASTM F2389

All right reserved - Drawing cannot be reproduced in anyway, failure todo so will entitle Nupi Americas to legal action. Information on this document are subject to change without notice