MOEN®

Specifications

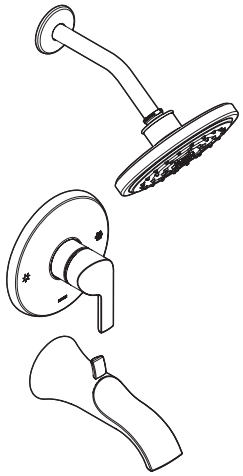

DOUX™ M-CORE™ 3-Series Single-Handle Tub/Shower Trim

Models: UTS3201 series - valve trim
UTS3202 series - shower trim
UTS3203 series - tub/shower trim

Valves: U130 Series and U140 Series

FAUCET DESCRIPTION
- Metal construction with varoius finishes idenditfied by suffix
- Shower Only kits include showerhead, arm, flange
- Tub/shower kits include showerhead, arm, flange and diverter spout

OPERATION
- Lever style handle with temperature indicator on the escutcheon.
- Variable volume control handle is lifted in a 0 to 25° arc
- Temperature operates through an 110° arc of handle rotation (full cold to full hot)
- Adjustable temperature limit stop to control maximum hot water temperature
- Pressure balancing mechanism maintains selected discharge temperature to ± 2°F

FLOW
- Showerhead limited to 2.5 gpm (9.5 L/min)
- EP suffix models contain a showerhead limited to 1.75 gpm (6.62 L/min)

CARTRIDGE
- 1213 Ceramic Disk Volume Control Cartridge
- Non-metallic/non-ferrous and plastic material
- Not compatible with back to back installations

STANDARDS
- Third party certified to ASME A112.18.1/CSA B-125-1, ASSE 1016 and all applicable requirements reference therein
- Moen's M-CORE™ pressure balance system is capable to meet the pressure and temperature variation requirements of ASSE 1016 when tested as low as 1.5 gpm (5.68 L/min)
- EP suffix models are third party certified to EPA WaterSense®
- ADA for lever handle

WARRANTY
- Lifetime limited warranty against leaks, drips and finish defects to the original homeowner
- 10 year limited warranty when used in a multifamily installation
- 5 year limited warranty when used in a commercial installation

Visit www.moen.com/support for complete details and limitations

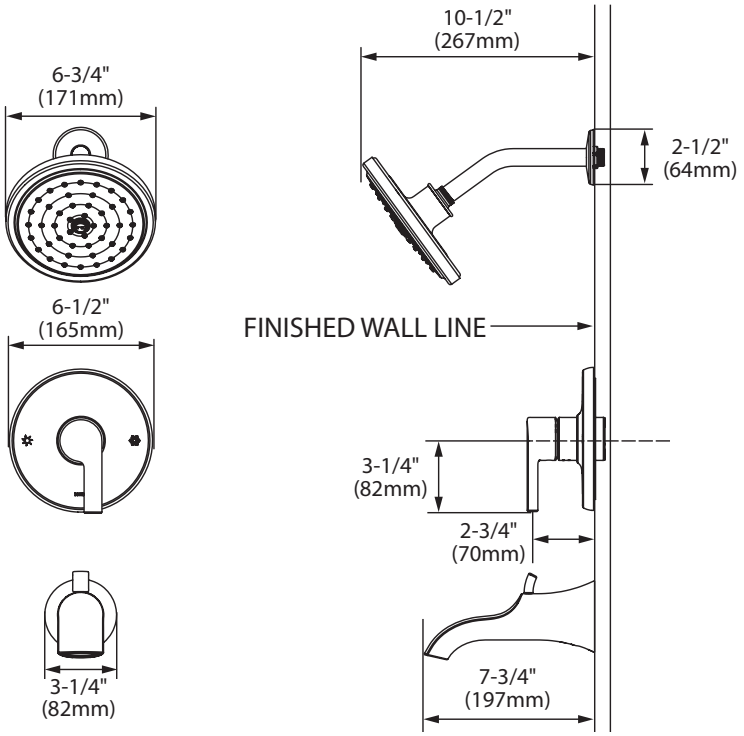

M•pact System

CRITICAL DIMENSIONS

(DO NOT SCALE)

FOR MORE INFORMATION CALL: 1-800-BUY-MOEN
www.moen.com

06/19/2020 SPC-14690 S000004836
Final Release-10