PEERLESS®

PTT14265▲
PTT14265▲-LHD
PTT14465▲
PTT14465▲-LHD

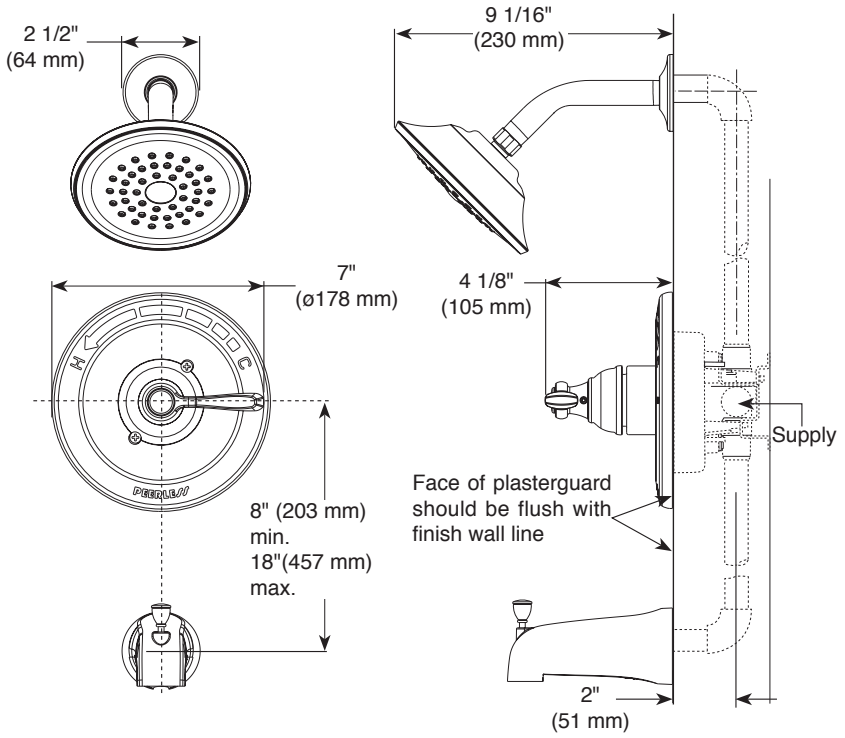

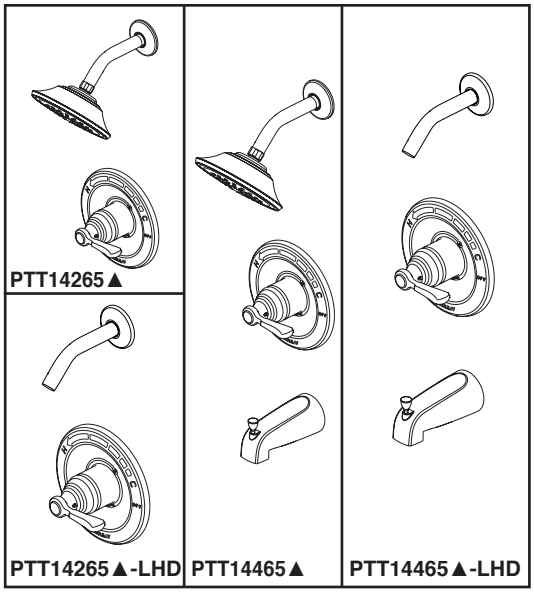

TUB AND SHOWER FAUCET TRIM

- Elmhurst™ Collection
- Shower Only (PTT14265▲ & PTT14265▲-LHD)
- Tub/Shower (PTT14465▲ & PTT14465▲-LHD)

STANDARD SPECIFICATIONS:

- Maintains a balanced pressure of hot and cold water even when a valve is turned on or off elsewhere in the system.
- For use with MultiChoice® Universal rough valve body (R10000 Series); not included.
- Back-to-back installation capability.
- Temperature only controlled with handle rotating a maximum of 120° from full cold to the full hot.
- Cartridge utilise integral check valve to prevent the cross flow of water within the valve.
- Shower head maximum flow rate 1.5 gpm @ 80 psi, 5.7 L/min @ 550 kPa.
- Single setting shower head.
- Slip-on tub spout.

WARRANTY:

- Parts and Finish - Lifetime limited warranty; or for commercial purchasers, 10 years for multi-family residential (apartments and condominiums) and 5 years for all other commercial uses, in each case from the date of purchase.

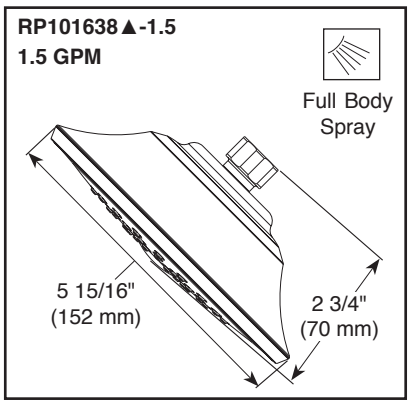

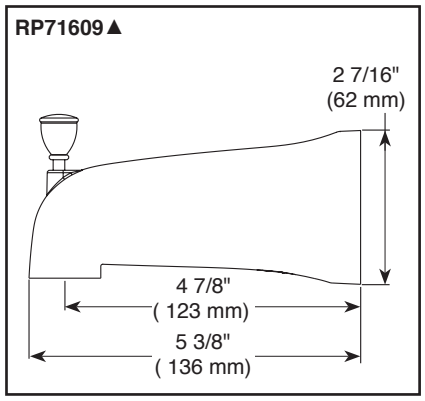

COMPLIES WITH

- ASME A112.18.1 / CSA B125.1
- EPA WaterSense® - Applies to PTT14265 & PTT14465 only

Indicates compliance to ICC/ANSI A117.1 - Valve control only

▲ Designate proper finish suffix

PSP-B-PTT14265 Rev. A