KOHLER®

# Levity® | K-706004-L

Sliding bath door, 62" H x 56-5/8 - 59-5/8" W, with 1/4" thick Crystal Clear glass

## Features

- Innovative roller design simplifies installation and provides out-of-plumb adjustability while glass is installed
- Cushioned center guide provides smooth, quiet sliding action
- Gently curved towel bars, inside and outside, provide integrated storage on the door
- CleanCoat®+ glass coating creates a hydrophobic barrier that repels water, soap scum, and residue, saving time and protecting shower doors 10 times longer than original CleanCoat. (Based on 2021 internal wear/abrasion testing using a microfiber cloth.)
- Tempered glass ensures enhanced safety and durability



## Available Colors/Finishes

*Color tiles intended for reference only.*

| | | |
|---|---|---|
| | SH | Bright Silver |
| | BL | Matte Black |
| | MX | Matte Nickel |
| | ABV | Anodized Brushed Bronze |
| | 2MB | Vibrant Brushed Moderne Brass |
| | ABZ | Anodized Dark Bronze |



1-800-4KOHLER (1-800-456-4537)
Kohler Co. reserves the right to make revisions without notice to product specifications.
For the most current specification sheet, go to www.kohler.com USA or www.kohler.ca Canada.
4-22-2026 11:3 - US-CA

THE BOLD LOOK OF KOHLER®

## Codes/Standards

ANSI Z97.1 (Tempered Glass)
CAN/CGSB-12.1
CPSC 16CFR 1201

## Technical Information

***All product dimensions are nominal.***

| | |
|---|---|
| Base-To-Wall Radius - Maximum: | 1/2" (13 mm) |
| Shower Ledge Minimum Flat: | 2-1/2" (64 mm) |
| Shower Wall Minimum Flat: | 3-1/2" (89 mm) |
| Weight: | 83.72 lbs (38 kg) |

## Material

- Frameless, 1/4" (6 mm) thick Crystal Clear tempered glass

## Warranty

***See website for detailed warranty information.***

KOHLER® Bath and Shower Doors Ten-Year Limited Warranty



1-800-4KOHLER (1-800-456-4537)
Kohler Co. reserves the right to make revisions without notice to product specifications.
For the most current specification sheet, go to www.kohler.com USA or www.kohler.ca Canada.
4-22-2026 11:3 - US-CA

THE BOLD LOOK OF KOHLER.

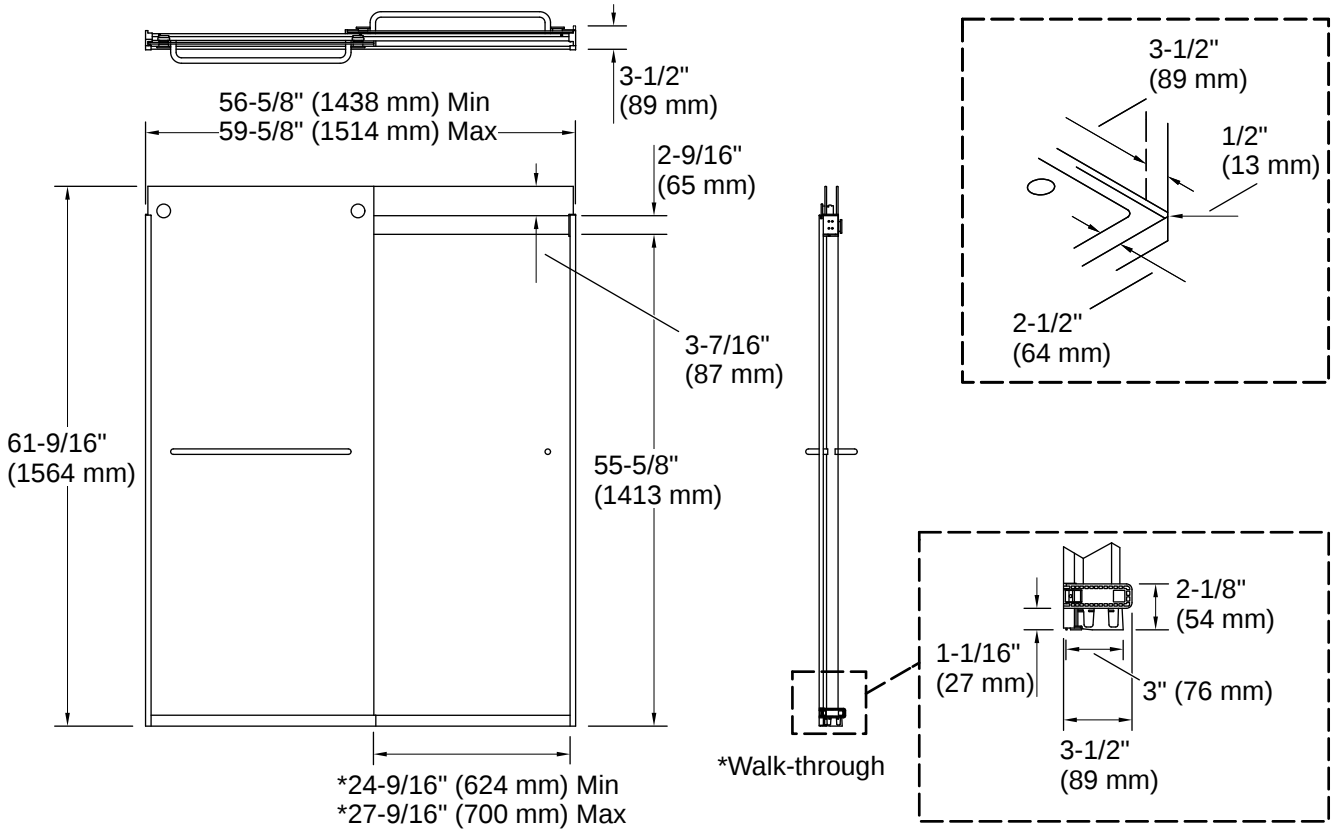


## Installation

- Sliding bath door
- Not for use in hospitality

## Installation Notes

***Install this product according to the installation instructions.***

If replacing a shower door, the narrow wall jamb design of this door may not cover the existing shower door holes.
The vertical opening should be a minimum of 64-1/2" (1638 mm) to allow for installation clearance.



1-800-4KOHLER (1-800-456-4537)
Kohler Co. reserves the right to make revisions without notice to product specifications.
For the most current specification sheet, go to www.kohler.com USA or www.kohler.ca Canada.
4-22-2026 11:3 - US-CA

THE BOLD LOOK OF KOHLER.