Specifications

PFXC8012
FAYWOOD Single Handle Pull Down Kitchen Faucet

Product Features

- Ceramic cartridge
- Metal lever handle
- 1 or 3 hole installation
- Optional deck plate included
- Two-function spray head: stream and spray
- Max. flow rate: 1.75 gpm (6.6 L/min) at 60 psi
- cUPC/IAPMO listed
- ADA compliant

PFXC8012CP

Optional Accessories / Available Parts

PFXC8012CP	Chrome
PFXC8012ZBN	PVD Brushed nickel
PFXC8012MB	Matte black

Product Specifications

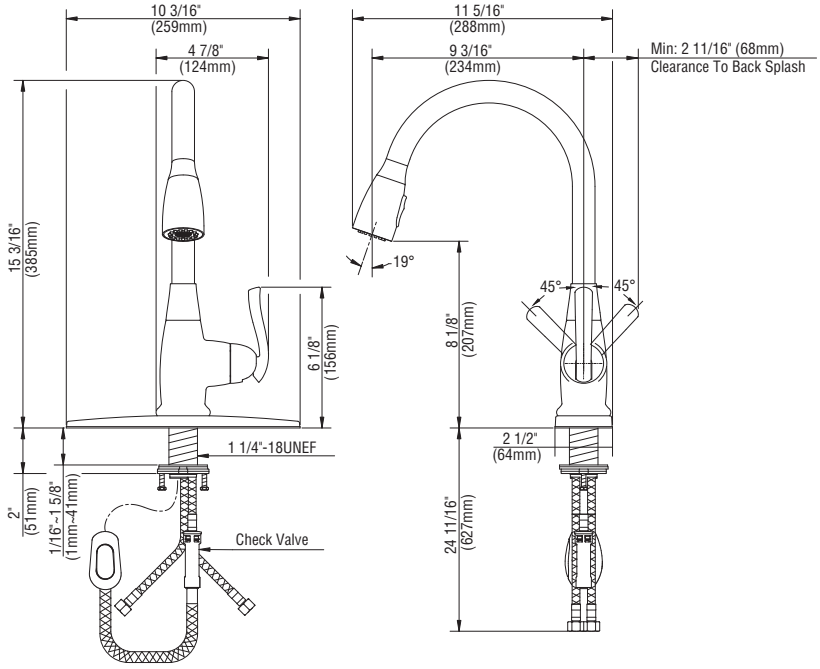

* All measurements are nominal. Please verify before actual installation.

Warranty and Codes

This product comes complete with installation, operating, care and maintenance instructions.
This PROFLO faucet carries a limited lifetime warranty when installed in residential applications.
The warranty is five years in commercial applications.
Compliant with lead content requirements of California AB 1953 and Vermont S.152.

©2021 Ferguson Enterprises, LLC 09/21