

Variation not shown: Integrated Side Mixer

Optima® Sensor Faucet

EAF-250-BAT-ISM-GR-0.5GPM-AER-IQ-FCT

Product description

Battery Power Supply, Integrated Side Mixer, Graphite Finish, 0.5 gpm, Aerated Spray, Infrared Sensor, Optima® Battery-Powered Deck-Mounted Mid Body Faucet.

Compliances & Certifications

(ADA Compliant, ASME A112.18.1 Compliant, BREEAM Materials Credit, BREEAM Water Credit, CEC Compliant, cUPC Certified, EPD, Green Globes Credit, Green Globes Water, HPD, IAPMO, LEED Credit, LEED HPD, NSF-61/CAN-61, NYC604.4, Proposition 65, Satisfies LEED Credits, TAS, WELL Building Standard)

Code 3335149

Finish

Graphite (GR)

Downloads

- EAF 200_225_250_275 Installation Instructions.pdf
- EAF 200_225_250_275 (SP) Installation Instructions.pdf
- Faucet Spray Heads Maintenance Guide.pdf
- Faucet and Soap Dispenser Brochure.pdf
- Additional Downloads

Videos

- PVD Special Finishes

Details

- Flow Rate: 0.5 gpm (1.9 Lpm) (0.5GPM)
- Spray Type: Aerated (AER)
- Sensor Type: Infrared
- Mounting Type: Single Hole
- Power Supply: Battery (BAT)
- Temperature Mixer: Integrated Side Mixer (ISM)
- Finish: Graphite (GR)
- Factory Default Timeout: 30s
- Factory Default GPC: 0.25 gpc

Features

Commercial Grade, ADA Compliant, Electronic, Sensor-Activated, Die-Cast Metal Hand Washing Faucet with the following features:

- Double Infrared Sensors with Automatic Setting Feature and Microprocessor
- Automatic Self-adapting Sensor Technology
- Low Battery Indicator
- Magnetic Solenoid Valve
- Water Supply Connection with Flexible High-pressure Hose and Strainer
- 6 volt Lithium CR-P2 Commercial Battery included
- Appropriate Mounting Hardware included
- 3 year limited warranty
- PVD Graphite Finish
- 0.5GPM sprayhead with multi-laminar flow pattern
- Battery powered with 2 CRP-2 Lithium batteries included
- Integrated Side Mixer (ISM) included in spout for temperature setting and adjustment. Also includes cap to cover handle if removed.
-

Electrical specifications

- Battery Life: 3 years 8,000 cycles/month
- Optional power harvesting significantly extends service life
- Sensor Range: 4”-5” (102-127 mm)
- Timeout Adjustment Setting: 30 Seconds

Warranty

View Warranty Information

Notes

All information contained within this document subject to change without notice.

Looking for other variations of the EAF-250 product? View the general spec sheet with all options.

Find a matching soap dispenser for this faucet.

Find a compatible sink for this faucet

EAF-250
Faucets with Single Line Water Supply

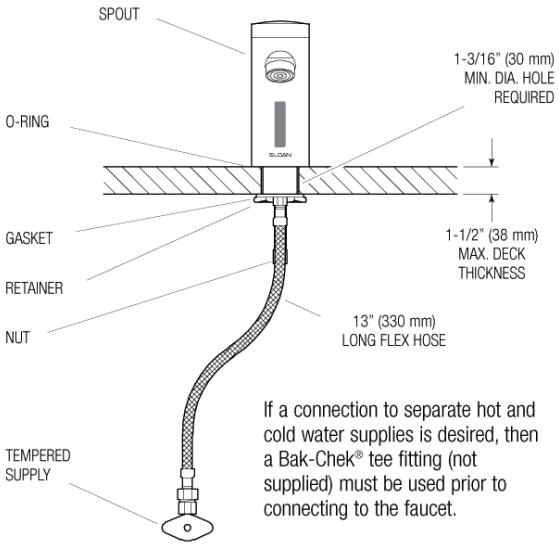

If a connection to separate hot and cold water supplies is desired, then a Bak-Chek® tee fitting (not supplied) must be used prior to connecting to the faucet.

EAF-250-ISM, EAF-250-ISM-IC AND
EAF-250-ISM-DPU-IC
Faucets with Hot and Cold Water Supply

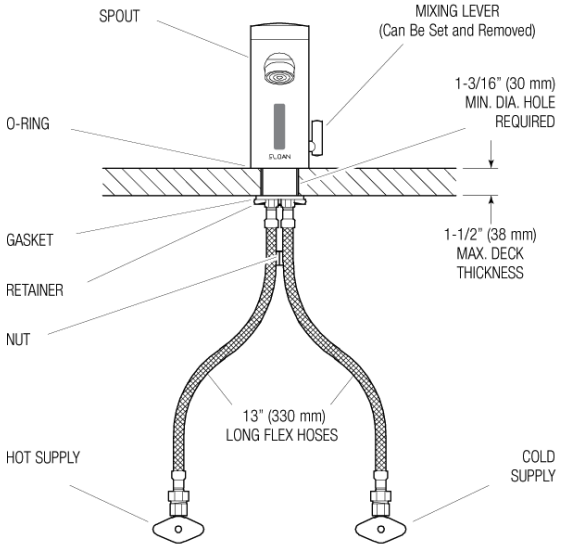

When the EAF faucet is installed on a sink that has three (3) hole punchings, a Trim Plate should be used. ***Trim Plates must be specified and ordered separately:***

ETF-312-A
Trim Plate for 4" (102 mm) Centerset Sink

ETF-510-A
Trim Plate for 8" (204 mm) Centerset Sink

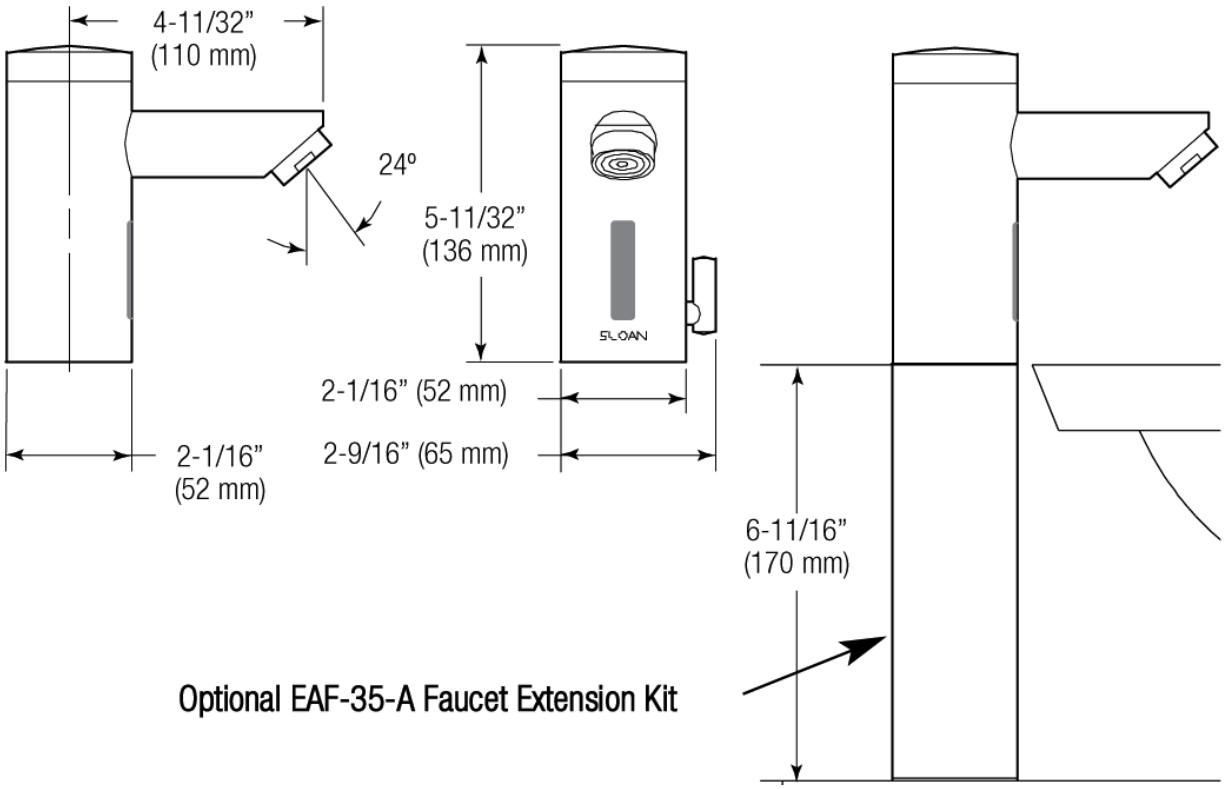

Optional EAF-35-A Faucet Extension Kit