SIMPLE SELECT PRESSURE BALANCE ROUGH-IN VALVE

Product Code: SH5001SSG

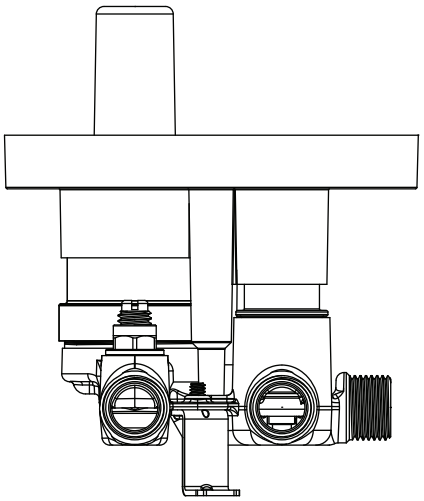

Product Features

- Cast brass valve body
  1/2" MIP or SWT with integral stops
- Ceramic disc cartridge
- Diverter outlets: 2
- Dual functionality allows for one or both shower features to run at a time
- Back-to-back capability
- Adjustable temperature limit stop
- Quick remove plaster guard
- Easy mounting brackets
- With optional restrictor, when installed this valve is compliant with both CALGreen and the California Plumbing Code
- Requires valve trim (sold separately)

Optional Accessories

- ACF4001AIR - Air test cap
- OBPF2F20002 -Replacement diverter cartridge
- OBPF2F20001 -Replacement cartridge

Codes and Certifications

- cUPC/IAPMO listed
- Meets ASME A112.18.1 /CSA B125.1
- Meets or exceeds ASSE 1016-P standards(anti-scald)
- Massachusetts Accepted

Standard

Part Code		Pressure Differential - psi			
SH5001SSG	Simultaneous (Both Valves	20 psi	40 psi	60 psi	80 psi
	Outlet A	2.20 gpm (8.3 L/min)	2.79 gpm (10.6 L/min)	3.58 gpm (13.5 L/miin)	4.00 gpm (15.1 L/min)
	Outlet B	1.10 gpm (4.2 L/min)	2.25 gpm (8.5 L/min)	3.08 gpm (11.7 L/min)	3.56 gpm (13.5 L/min)
	Total	3.30 gpm (12.5 L/min)	5.04 gpm (19.1 L/min)	6.66 gpm (25.2 L/min)	7.56 gpm (28.6 L/min)
SH5001SSG	Separate (A or B Closed)	20 psi	40 psi	60 psi	80 psi
	Outlet A	2.71 gpm (10.3 L/min)	4.31 gpm (16.3 L/min)	5.55 gpm (21.0 L/min)	6.34 gpm (24.0 L/min)
	Outlet B	2.49 gpm (9.4 L/min)	3.87 gpm (14.6 L/min)	5.00 gpm (18.9 L/min)	5.62 gpm (21.3 L/min)

With Flow Restrictor

Part Code		Pressure Differential - psi			
SH5001SSG	Simultaneous (Both Valves	20 psi	40 psi	60 psi	80 psi
	Outlet A	0.43 gpm (1.6 L/min)	0.56 gpm (2.1 L/min)	0.64 gpm (2.4 L/min)	0.68 gpm (2.6 L/min)
	Outlet B	0.77 gpm (2.9 L/min)	0.84 gpm (3.2 L/min)	0.89 gpm (3.4 L/min)	0.96 gpm (3.6 L/min)
	Total	1.20 gpm (4.5 L/min)	1.40 gpm (5.3 L/min)	1.53 gpm (5.8 L/min)	1.64 gpm (6.2 L/min)
SH5001SSG	Separate (A or B Closed)	20 psi	40 psi	60 psi	80 psi
	Outlet A	1.17 gpm (4.4 L/min)	1.38 gpm (5.2 L/min)	1.49 gpm (5.6 L/min)	1.59 gpm (6.0 L/min)
	Outlet B	1.16 gpm (4.4 L/min)	1.39 gpm (5.3 L/min)	1.49 gpm (5.6 L/min)	1.60 gpm (6.1 L/min)

Revised: 08/25/26

SIMPLE SELECT PRESSURE BALANCE ROUGH-IN VALVE

Product Code: SH5001SSG

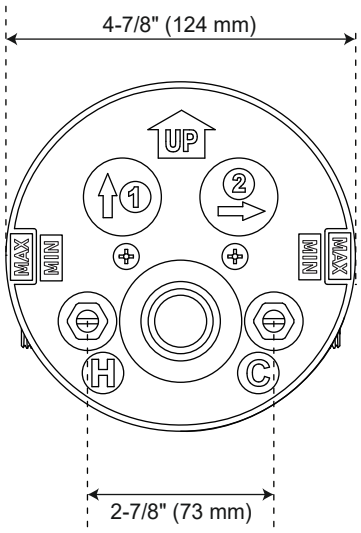

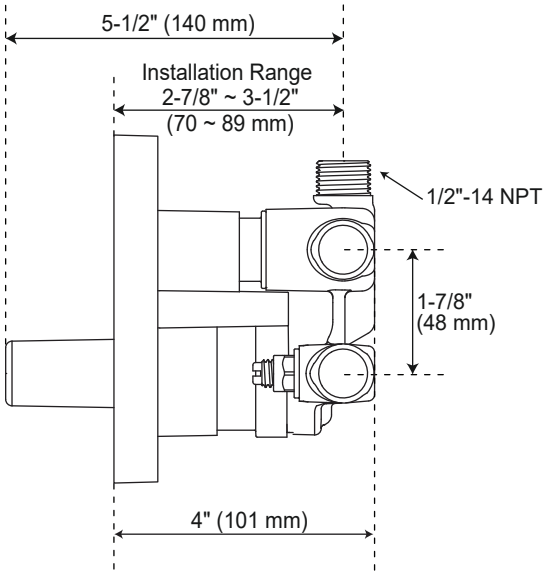

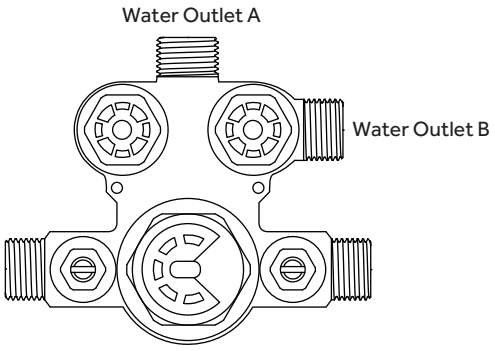

All dimensions and specifications are nominal and may vary. Use actual products foraccuracy

Revised: 08/25/26