Specifications

PF600 / PF1061 – OTTER CREEK SERIES

PEDESTAL LAVATORY

Product Features

- Vitreous china
- 20" x 19"
- Available as 1-hole or 4" CC
- Pedestal conceals all plumbing
- Integral self-draining faucet deck
- High-gloss and stain-resistant surface
- Mounting bracket included
- Color: White

Optional Accessories/Available Parts

PF6001WH	20" x 19" 1H VC Lav only Otter Creek WH
PF6004WH	20" x 19" 4CC VC Lav only Otter Creek WH
PF1061WH	2VC PED only F/PF600/700 Otter Creek WH

PF6004WH/PF1061WH

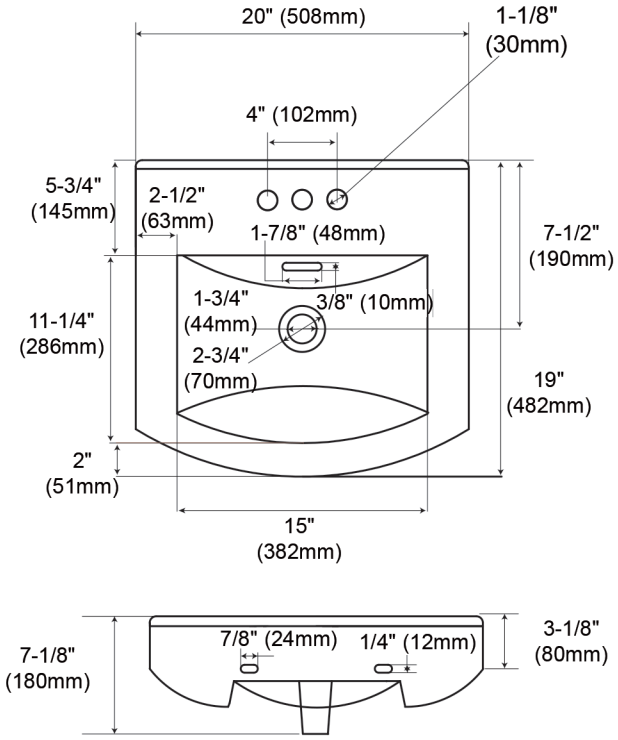

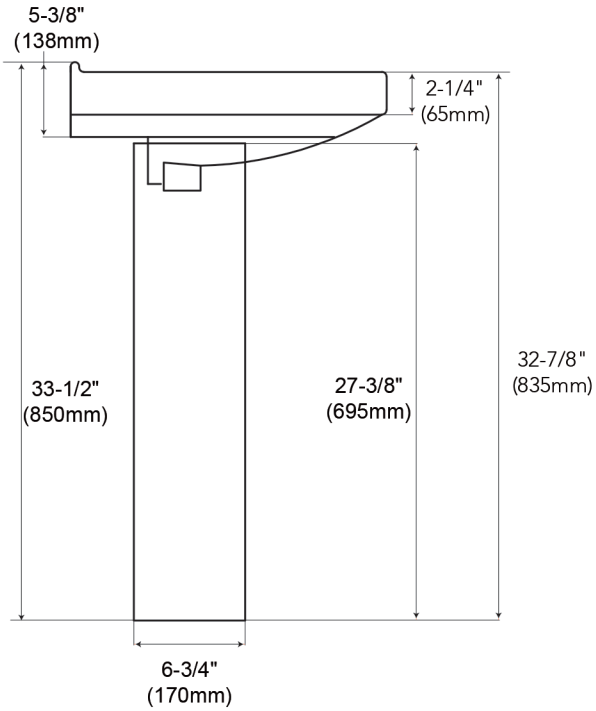

Warranty and Codes

This product comes complete with installation, operating, care and maintenance instructions.
This PROFLO product carries a limited lifetime warranty.

* All dimensions and specifications are nominal and may vary: Dimensions of 8" and greater have a tolerance of +3%. Dimensions less than 8" have a tolerance of +5%.

©2023 Ferguson Enterprises, LLC 0923 5717212

FERGUSON.COM/PROFLO