Specifications

PFWSC2960
CASSADORE 8" WIDESPREAD BATHROOM FAUCET

Product Features

- Ceramic cartridge
- Metal handles
- With brass pop-up
- Requires 3-hole sink with 8" on-center
- Flow rate: 1.2 gpm (4.54 L/min) at 60 psi
- Meets ASME A112.18.1
- NSF 61 compliant
- cUPC/IAPMO listed
- ADA Compliant

Model Numbers:

PFWSC2960CP Chrome
PFWSC2960ZBN Brushed nickel

Product Specifications

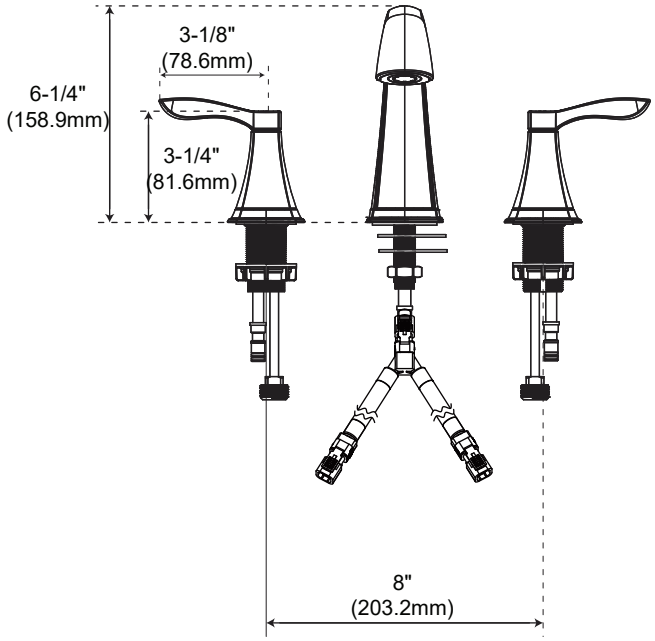

PFWSC2960CP

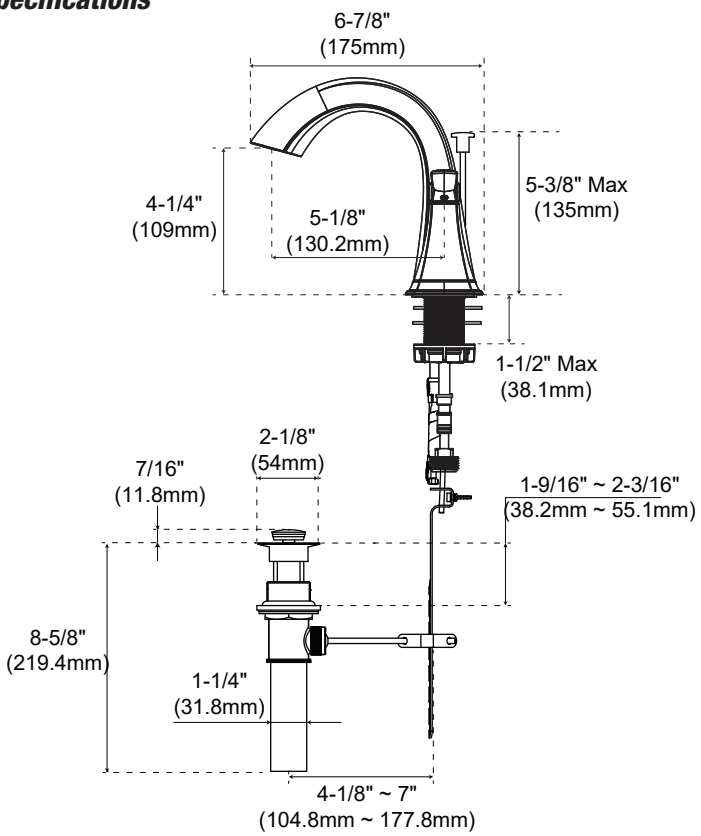

* All measurements are nominal. Please verify before actual installation.

Warranty and Codes

This product comes complete with installation, operating, care and maintenance instructions. This PROFLO faucet carries a limited lifetime warranty when installed in residential applications. The warranty is five years in commercial applications. This product meets ASME: A112.18.1. *Compliant with lead content requirements of US Senate Bill S.3874.*

©2021 Ferguson Enterprises, LLC. FG 07/2021-C

PROFLO.COM