12,000 BTU/H FLOOR MOUNTED IDU

SUBMITTAL COVER SHEET

PROJECT NAME _____

LOCATION _____

ARCHITECT _____

ENGINEER _____

CONTRACTOR _____

REFERENCE _____

SUBMITTED BY _____ **DATE** _____

Indoor Unit (IDU): DRAS12F1A	**Wireless Remote Control**

CAPACITIES		
Cooling Capacity (BTU/hr)	Rated	12000
Heating Capacity (BTU/hr)	Rated	12000

ELECTRICAL DATA	
Voltage/Phase/Frequency	208–230V, 1 Phase, 60 Hz

LINE SET REQUIREMENTS	
Connection Type	Flare
Liquid	Ø1/4" (Ø6.35mm)
Gas	Ø1/2" (Ø12.7mm)
Drain Port O.D. / Drain Hose I.D.	Ø5/8" (Ø16mm)

INDOOR UNIT FAN DATA		
Air Flow (CFM)	Low	201
	Medium	276
	High	321
Type	DC	
RLA	1.0	
Sound Pressure (dB(A))	Low	37
	Medium	46
	High	48

INDOOR UNIT DIMENSIONS		
Unit Dimensions	Width	27 9/16"
	Depth	8 1/4"
	Height	23 5/8"
Carton Dimensions	Width	30 11/16"
	Depth	11 13/16"
	Height	27"
Net Weight	32.6 lbs.	
Gross Weight	41.0 lbs.	

PRODUCT FEATURES

- Wireless Remote Control with "Follow Me" Technology
- Auto Restart
- Auto Changeover
- 24-hour Timer
- Self Clean Function

Specifications are subject to change without notice.

© 2021 Ferguson Enterprises LLC

12,000 BTU/H FLOOR MOUNTED IDU

DIMENSIONS – DRAS12F1A

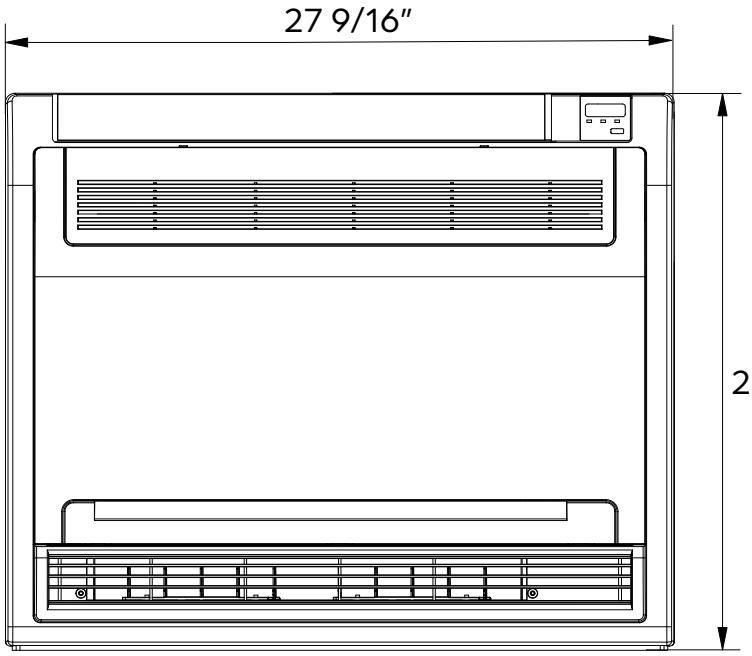

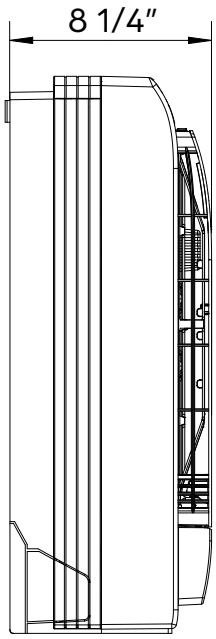

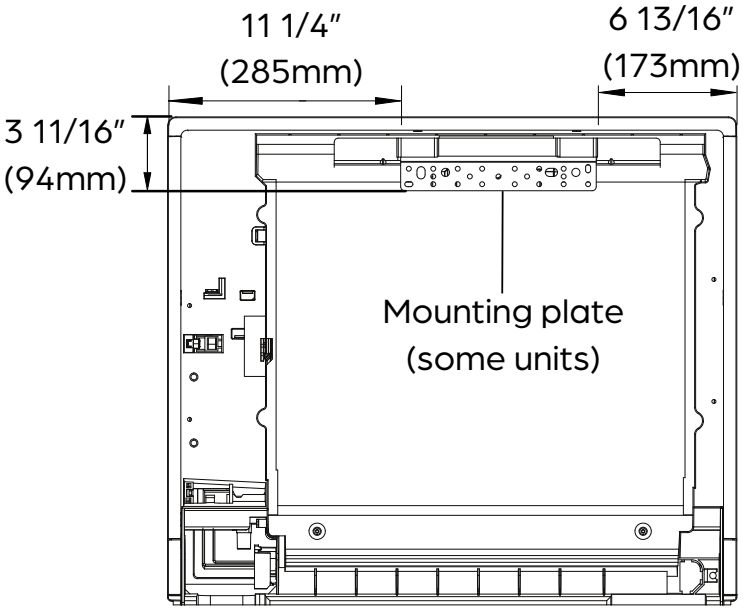

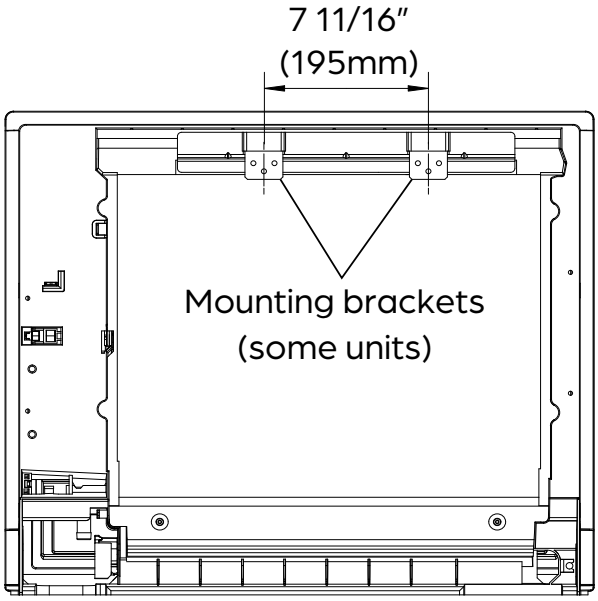

Specifications are subject to change without notice.

© 2021 Ferguson Enterprises LLC

12,000 BTU/H SINGLE ZONE OUTDOOR UNIT

SUBMITTAL COVER SHEET

PROJECT NAME _____

LOCATION _____

ARCHITECT _____

ENGINEER _____

CONTRACTOR _____

REFERENCE _____

SUBMITTED BY _____ **DATE** _____

Single Zone Outdoor Unit (ODU):
DRA1U12S1A

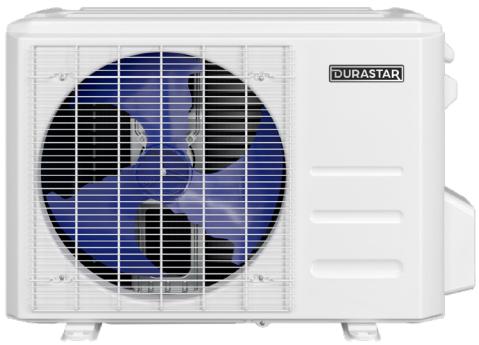

CAPACITIES		
Cooling Capacity (BTU/hr)	Rated[1]	12000
	Minimum	3800
	Maximum	12800
Heating Capacity (BTU/hr)	Rated[2]	12000
	Minimum	4500
	Maximum	13100

EFFICIENCY DATA	
SEER	21.5
EER	14.0
HSPF	11.5

PRODUCT FEATURES

- Variable Speed Inverter Compressor
- Auto Restart
- Base Pan Heater

OUTDOOR TEMPERATURE OPERATION	
Cooling	-13 °F – 122 °F (-25° C – 50° C)
Heating	-13 °F – 86 °F (-25° C – 30° C)

ELECTRICAL DATA	
Voltage/Phase/Frequency	208-230V, 1 Phase, 60 Hz
Voltage Range	187-253V
Recommended Breaker (Amps)	15
Minimum Circuit Ampacity (Amps)	12
Minimum Wire Size	16 AWG
Rated Current – Cooling (Amps)[1]	4.05
Rated Current – Heating (Amps)[2]	4.72

[1] Measured at 95 °F.
[2] Measured at 47 °F.

AHRI CERTIFIED® www.ahridirectory.org Unitary Small HP AHRI Standard 210/240 Certification applies only when the complete system is listed with AHRI.

ETL LISTED US Intertek

Specifications are subject to change without notice.
© 2021 Ferguson Enterprises LLC
www.durastar.com

Form No. V1.0_02.21

12,000 BTU/H SINGLE ZONE OUTDOOR UNIT

SPECIFICATIONS – DRA1U12S1A

SYSTEM DATA	
Refrigerant Type	R-410A
Refrigerant Charge (oz.)	40.6
Oil Type	VG74
Oil Charge (oz.)	12.5 (370 ml)
Design Pressure (PSIG)	550/340

LINE SET REQUIREMENTS	
Connection Type	Flare
Liquid	Ø1/4" (Ø6.35mm)
Gas	Ø1/2" (Ø12.7mm)
Pre-Charge Length	25'
Maximum Length	82'
Minimum Length (One Indoor Unit)	10'
Max. Height Differential Between Indoor and Outdoor Unit	33'
Additional Refrigerant (oz/ft)	0.16

OUTDOOR UNIT FAN DATA	
Airflow (CFM)	1176
Sound Pressure (dB(A))	55
Type	DC
RLA (A)	0.4

OUTDOOR UNIT DIMENSIONS		
Unit Dimensions	Width	31 1/2"
	Depth	13 1/8"
	Height	21 13/16"
Carton Dimensions	Width	36 1/4"
	Depth	15 3/8"
	Height	24 5/8"
Net Weight	80.5 lbs.	
Gross Weight	86.2 lbs.	

Specifications are subject to change without notice.
© 2021 Ferguson Enterprises LLC

12,000 BTU/H SINGLE ZONE OUTDOOR UNIT

ODU DIMENSIONS – DRA1U12S1A

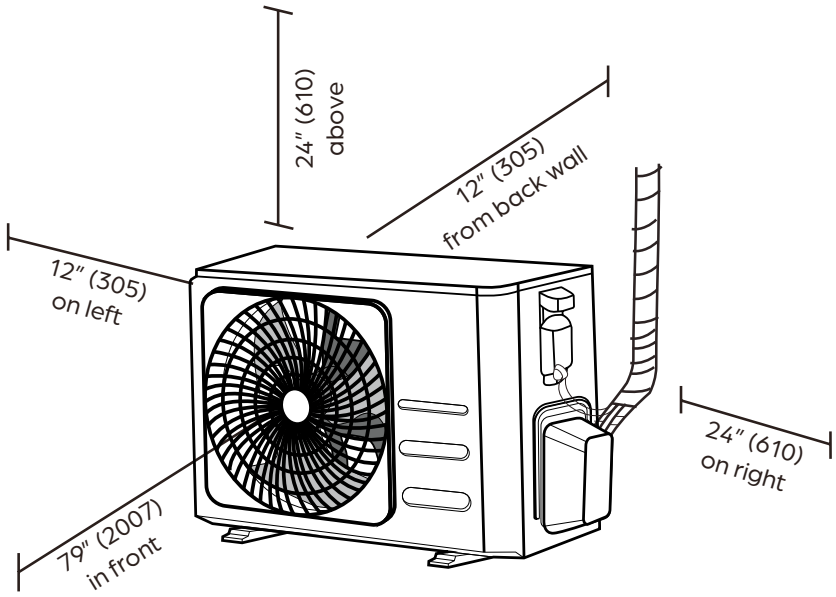

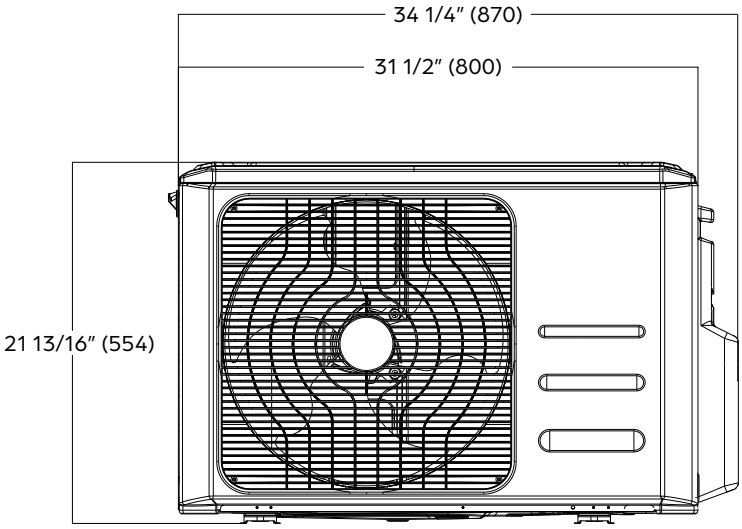

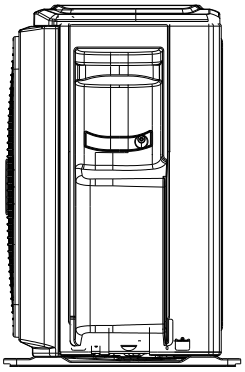

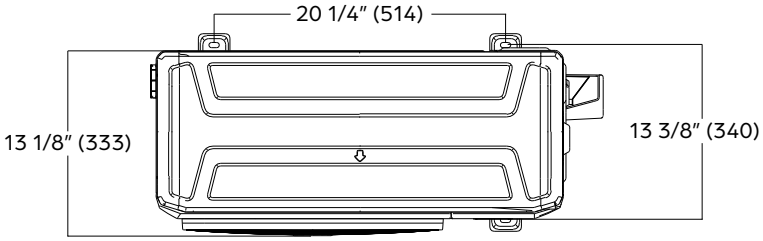

NOTE

Illustrations in this document are for explanatory purposes. The actual shape of your mini-split equipment may vary slightly.

Specifications are subject to change without notice.
© 2021 Ferguson Enterprises LLC

12,000 BTU/H FLOOR MOUNTED HEAT PUMP SYSTEM

SUBMITTAL COVER SHEET

PROJECT NAME _____

LOCATION _____

ARCHITECT _____

ENGINEER _____

CONTRACTOR _____

REFERENCE _____

SUBMITTED BY _____ **DATE** _____

Indoor Unit (IDU): DRAS12F1A	**Outdoor Unit (ODU):** DRA1U12S1A	**Wireless Remote Control**
	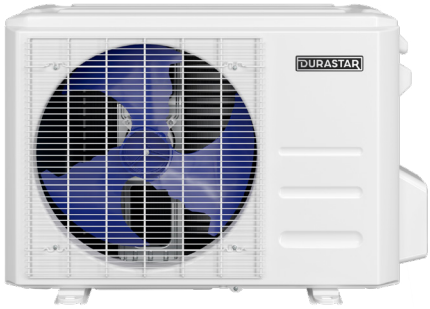	

CAPACITIES		
Cooling Capacity (BTU/hr)	Rated[1]	12000
	Minimum	4200
	Maximum	13100
Heating Capacity (BTU/hr)	Rated[2]	12000
	Minimum	4800
	Maximum	13600

EFFICIENCY DATA	
SEER	20.5
EER	13.0
HSPF	10.0

OUTDOOR TEMPERATURE OPERATION	
Cooling	–13 °F – 122 °F (–25 °C – 50 °C)
Heating	–13 °F – 86 °F (–25 °C – 30 °C)

ELECTRICAL DATA	
Voltage/Phase/Frequency	208–230V, 1 Phase, 60 Hz
Voltage Range	187–253V
Recommended Breaker (Amps)	15
Minimum Circuit Ampacity (Amps)	12
Minimum Wire Size	16 AWG
Rated Current – Cooling (Amps)[1]	4.22
Rated Current – Heating (Amps)[2]	4.39

[1] Measured at 95 °F.
[2] Measured at 47 °F.

PRODUCT FEATURES

- Wireless Remote Control with "Follow Me" Technology
- Variable Speed Inverter Compressor
- Auto Restart
- Auto Changeover
- 24-hour Timer
- Self Clean Function

Specifications are subject to change without notice.

© 2021 Ferguson Enterprises LLC

12,000 BTU/H FLOOR MOUNTED HEAT PUMP SYSTEM

SPECIFICATIONS

SYSTEM DATA	
Refrigerant Type	R-410A
Refrigerant Charge (oz.)	40.6
Oil Type	Ester Oil VG74
Oil Charge (oz.)	12.5 (370 ml)
Design Pressure (PSIG)	550/340

LINE SET REQUIREMENTS	
Connection Type	Flare
Liquid	Ø1/4" (Ø6.35mm)
Gas	Ø1/2" (Ø12.7mm)
Pre-Charge Length	25'
Minimum Length	10'
Maximum Length	82'
Maximum Height Differential	33'
Additional Refrigerant (oz./ft)	0.16

FAN DATA		
Indoor Unit Air Flow (CFM)	Low	201
	Medium	276
	High	321
Moisture Removal (Pints/hr)	2.65	
Drain Port O.D. / Drain Hose I.D.	Ø5/8" (Ø16mm)	

SOUND PRESSURE (dB(A))		
Indoor Unit	Low	37
	Medium	46
	High	48
Outdoor Unit	55	

INDOOR UNIT DIMENSIONS		
Unit Dimensions	Width	27 9/16"
	Depth	8 1/4"
	Height	23 5/8"
Carton Dimensions	Width	30 11/16"
	Depth	11 13/16"
	Height	27"
Net Weight	32.6 lbs.	
Gross Weight	41.0 lbs.	

OUTDOOR UNIT DIMENSIONS		
Unit Dimensions	Width	31 1/2"
	Depth	13 1/8"
	Height	21 13/16"
Carton Dimensions	Width	36 1/4"
	Depth	15 3/8"
	Height	24 5/8"
Net Weight	80.5 lbs.	
Gross Weight	86.2 lbs.	

Specifications are subject to change without notice.

© 2021 Ferguson Enterprises LLC

12,000 BTU/H FLOOR MOUNTED HEAT PUMP SYSTEM

IDU DIMENSIONS – DRAS12F1A

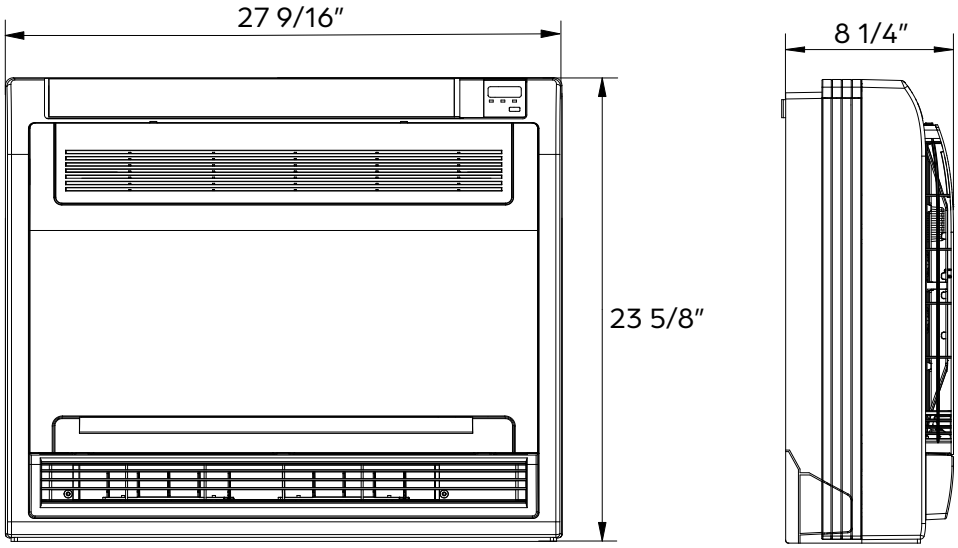

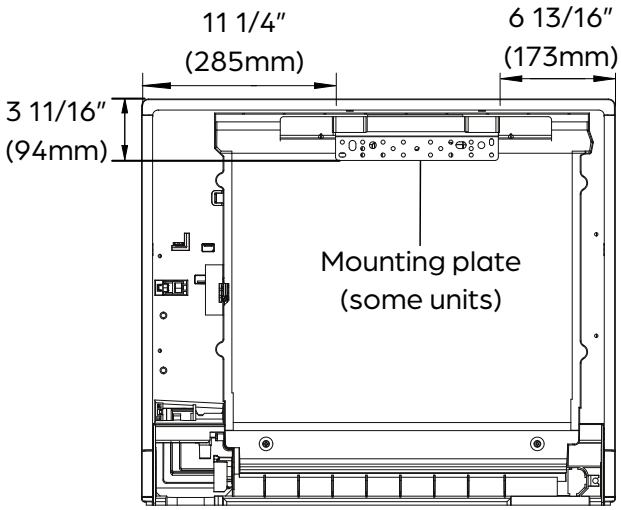

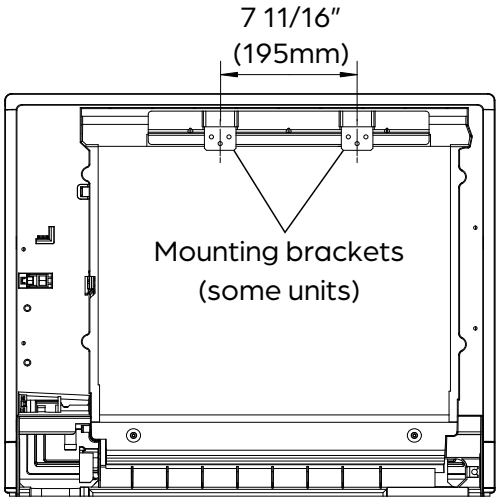

Specifications are subject to change without notice.
© 2021 Ferguson Enterprises LLC

12,000 BTU/H FLOOR MOUNTED HEAT PUMP SYSTEM

ODU DIMENSIONS – DRA1U12S1A

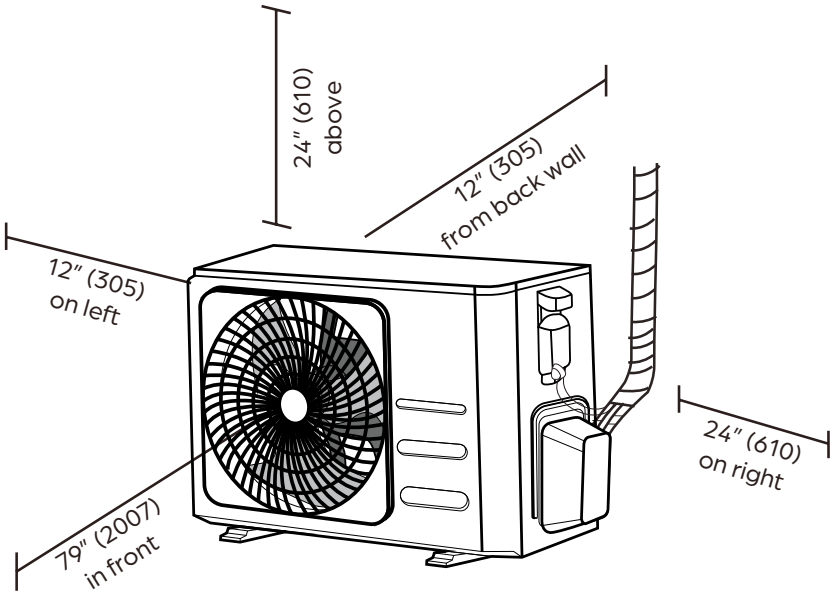

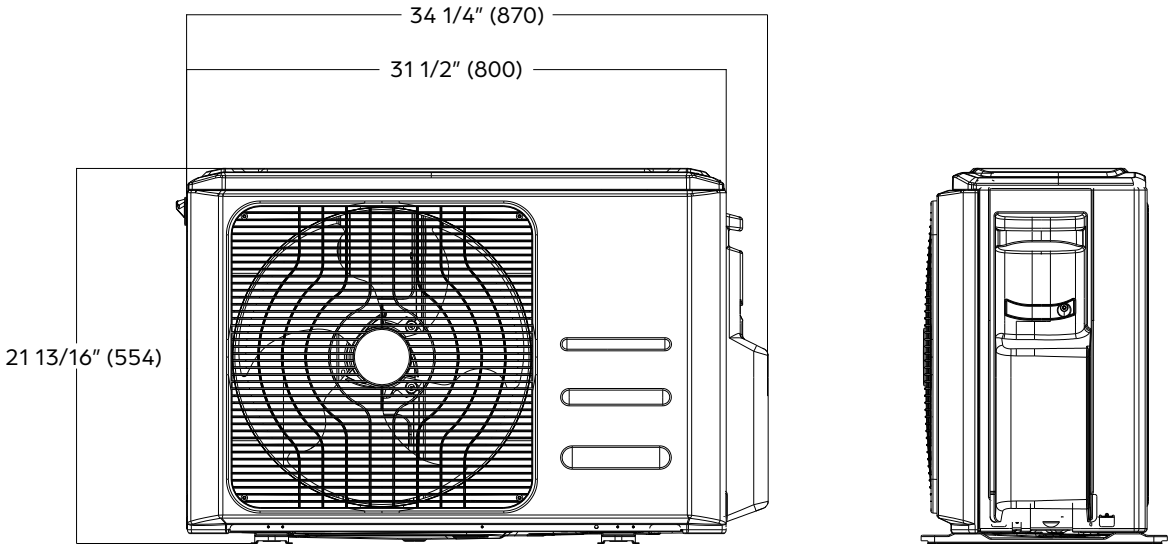

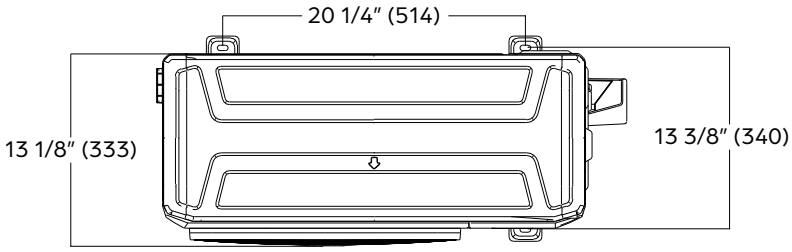

NOTE

Illustrations in this document are for explanatory purposes. The actual shape of your mini-split equipment may vary slightly.

Specifications are subject to change without notice.

© 2021 Ferguson Enterprises LLC

MULTI-ZONE COMPATIBILITY CHART

	Type	BTU/h	Model Number	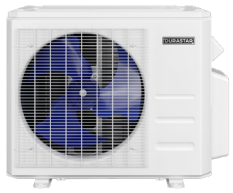 DRA2U18M1A	DRA3U28M1A	DRA4U36M1A	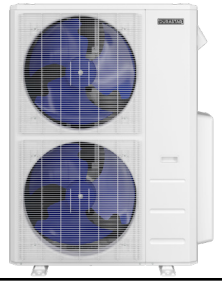 DRA5U48M1A
	Wall Mounted	9,000	DRAW09F1A	✓	✓	✓	✓
		12,000	DRAW12F1A	✓	✓	✓	✓
		18,000	DRAW18F1A	✓	✓	✓	✓
		24,000	DRAW24F1A	✓	✓	✓	✓
	Ceiling Cassette	9,000	DRAC09F1A	✓	✓	✓	✓
		12,000	DRAC12F1A	✓	✓	✓	✓
		18,000	DRAC18F1A	✓	✓	✓	✓
		24,000	DRAC24F1A	✓	✓	✓	✓
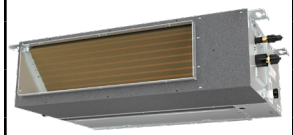	Slim Ducted	9,000	DRAD09F1A	✓	✓	✓	✓
		12,000	DRAD12F1A	✓	✓	✓	✓
		18,000	DRAD18F1A	✓	✓	✓	✓
		24,000	DRAD24F1A	✓	✓	✓	✓
	Floor/Ceiling Flex	18,000	DRAF18F1A	✓	✓	✓	✓
		24,000	DRAF24F1A	✓	✓	✓	✓
	Floor Mounted	12,000	DRAS12F1A	✓	✓	✓	✓

Specifications are subject to change without notice.

© 2021 Ferguson Enterprises LLC

MAXIMUM NUMBER OF SUPPORTED INDOOR UNITS

	BTU/h	Model Number	Maximum Indoor Units
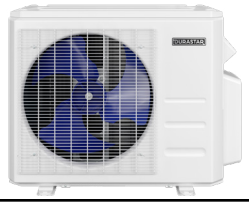	18,000	DRA2U18M1A	2
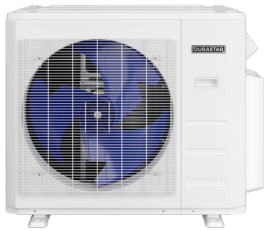	28,000	DRA3U28M1A	3
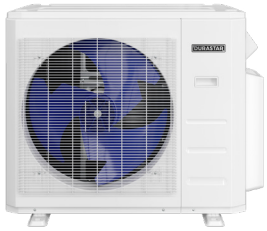	36,000	DRA4U36M1A	4
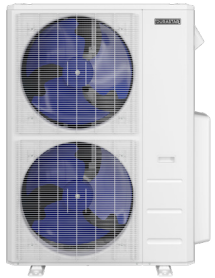	48,000	DRA5U48M1A	5

Specifications are subject to change without notice.

© 2021 Ferguson Enterprises LLC

SUPPORTED MULTI-ZONE MATCHES – CHART 1/2

Outdoor Models	2-Zone	3-Zone	4-Zone	5-Zone
DRA2U18M1A	9+9			
	9+12			
	12+12			
DRA3U28M1A	9+9	9+9+9		
	9+12	9+9+12		
	9+18	9+9+18		
	12+12	9+12+12		
	12+18	12+12+12		
	18+18			
DRA4U36M1A	9+18	9+9+9	9+9+9+9	
	9+24	9+9+12	9+9+9+12	
	12+12	9+9+18	9+9+9+18	
	12+18	9+9+24	9+9+12+12	
	12+24	9+12+12	9+9+12+18	
	18+18	9+12+18	9+12+12+12	
		9+18+18	12+12+12+12	
		12+12+12		
		12+12+18		
		12+18+18		
		12+12+24		

NOTE
The nominal values above represent indoor unit cooling capacity BTUs per hour in the 1,000s. Example: 9 = 9,000 BTU/h.

Specifications are subject to change without notice.
© 2021 Ferguson Enterprises LLC

SUPPORTED MULTI-ZONE MATCHES – CHART 2/2

Outdoor Models	2-Zone	3-Zone	4-Zone	5-Zone
DRA5U48M1A	9+24	9+9+18	9+9+9+9	9+9+9+9+9
	12+24	9+9+24	9+9+9+12	9+9+9+9+12
	18+18	9+12+12	9+9+9+18	9+9+9+9+18
	18+24	9+12+18	9+9+9+24	9+9+9+9+24
	24+24	9+12+24	9+9+12+12	9+9+9+12+12
		9+18+18	9+9+12+18	9+9+9+12+18
		9+18+24	9+9+12+24	9+9+9+18+18
		9+24+24	9+9+18+18	9+9+12+12+12
		12+12+12	9+9+18+24	9+9+12+12+18
		12+12+18	9+12+12+12	9+12+12+12+12
		12+12+24	9+12+12+18	9+12+12+12+18
		12+18+18	9+12+12+24	12+12+12+12+12
		12+18+24	9+12+18+18	
		12+24+24	9+18+18+18	
		18+18+18	12+12+12+12	
		18+18+24	12+12+12+18	
			12+12+12+24	
			12+12+18+18	

NOTE
The nominal values above represent indoor unit cooling capacity BTUs per hour in the 1,000s. Example: 9 = 9,000 BTU/h.

Specifications are subject to change without notice.
© 2021 Ferguson Enterprises LLC

MINI-SPLIT INDOOR UNIT SKU NOMENCLATURE

DR	A	W	09	F	1	A

Brand
DR: Durastar

Series Name
A: First Generation

Equipment Type
C: Ceiling Cassette
D: Slim Ducted
F: Floor/Ceiling Flex
S: Floor Mounted
W: Wall Mounted

Nominal Cooling BTUs
09: 9,000
12: 12,000
18: 18,000
24: 24,000

Zone Compatibility
F: Free Match (Single or Multi-Zone)
M: Multi-Zone
S: Single Zone

Major Generation
1: First Generation

Minor Generation
A: First Generation

Specifications are subject to change without notice.
© 2021 Ferguson Enterprises LLC

MINI-SPLIT OUTDOOR UNIT SKU NOMENCLATURE

DR	A	1	U	09	S	1	A

Brand
DR: Durastar

Series Name
A: First Generation

# of Supported IDU Connections
1–5

Equipment Type
U: Outdoor Heat Pump

Nominal Capacity
09: 9,000
12: 12,000
18: 18,000
24: 24,000
28: 28,000
36: 36,000
48: 48,000

Zone Compatibility
F: Free Match (Single or Multi-Zone)
M: Multi-Zone
S: Single Zone

Major Generation
1: First Generation

Minor Generation
A: First Generation

Specifications are subject to change without notice.
© 2021 Ferguson Enterprises LLC