MOEN®

Specifications

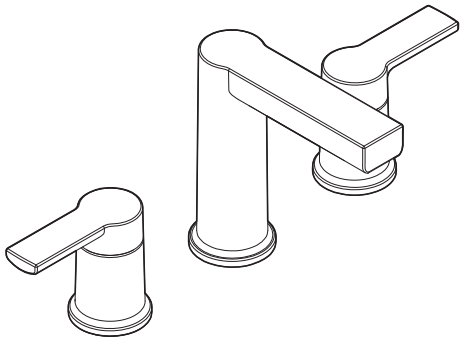

RINZA™
Two-Handle Widespread Lavatory Faucet

Models: 84629SRN

NOTE: This faucet is designed to be installed through 3 – 1 1/8" dia. holes, 4" on center.

WaterSense Meets EPA Criteria
Certified by IAPMO R&T

DESCRIPTION
- Metal construction with various finishes identified by suffix
- 1/2" IPS connections
- Includes non-metal push-down waste assembly

OPERATION
- Lever style handles
- Hot side counterclockwise to open (clockwise to close)
- Cold side clockwise to open (counter-clockwise to close)

FLOW
- Water usage is limited to these maximum flow rates as indicated by the corresponding product markings
- 1.2 gpm max (4.5L/min) at 60 psi

CARTRIDGE
- 1234 cartridge design
- Nonmetallic and stainless steel material

STANDARDS
- Third party certified to WaterSense®, ASME A112.18.1/CSA B125.1 and all applicable requirements referenced therein
- Certified to NSF 61/9 & 372
- Products marked with 1.2 gpm are compliant with California water efficiency regulations
- Complies with California Proposition 65 and with the Federal Safe Drinking Water Act
- ADA for lever handles

WARRANTY
- Lifetime limited warranty against leaks, drips and finish defects to the original homeowner
- 10 year limited warranty when used in a multifamily installation
- 5 year limited warranty when used in a commercial installation

Visit www.moen.com/support for complete details and limitations

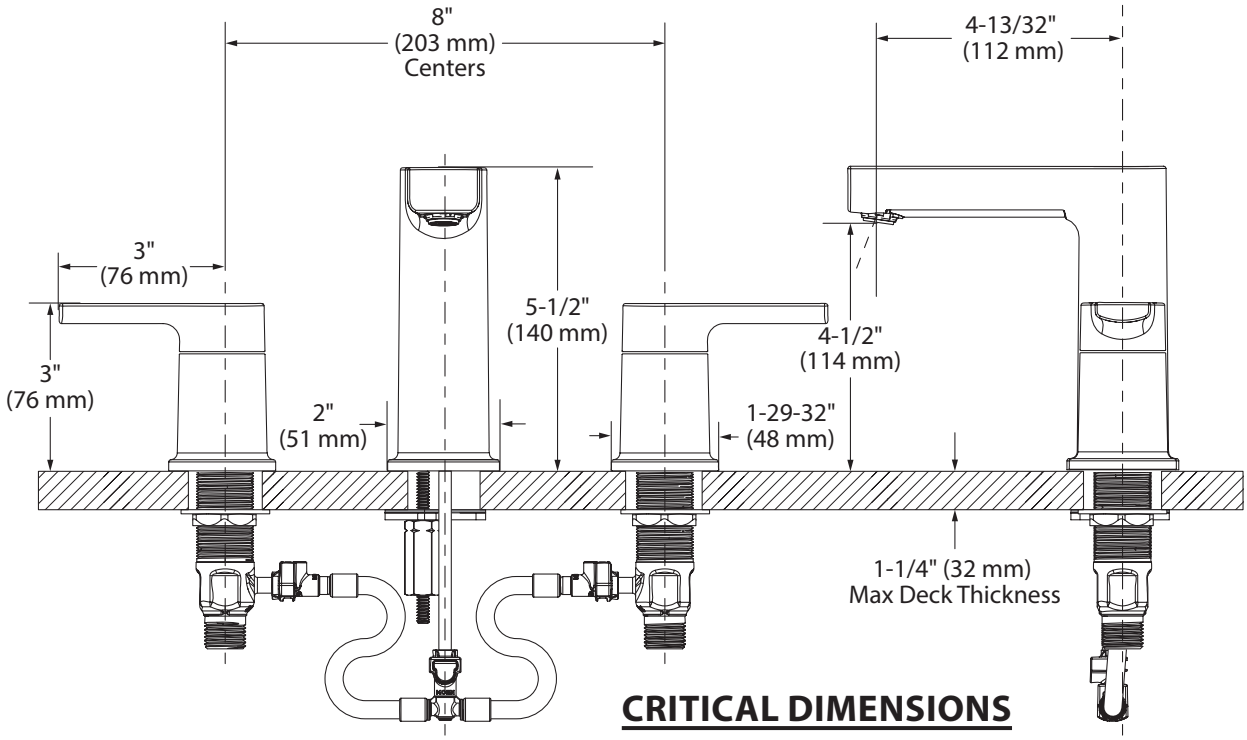

CRITICAL DIMENSIONS

(DO NOT SCALE)

FOR MORE INFORMATION CALL: 1-800-BUY-MOEN
www.moen.com

01/27/2021 SPC1396 500000365962 Released 01