AXOR

hansgrohe

Brand	hansgrohe
Art. Name	**Metropol Classic** Widespread Faucet 110 with Cross Handles and Pop-Up Drain, 1.2 GPM
Art. Nr.	31306671
Surface	matte black
Pos.	1

Product Picture

Drawing

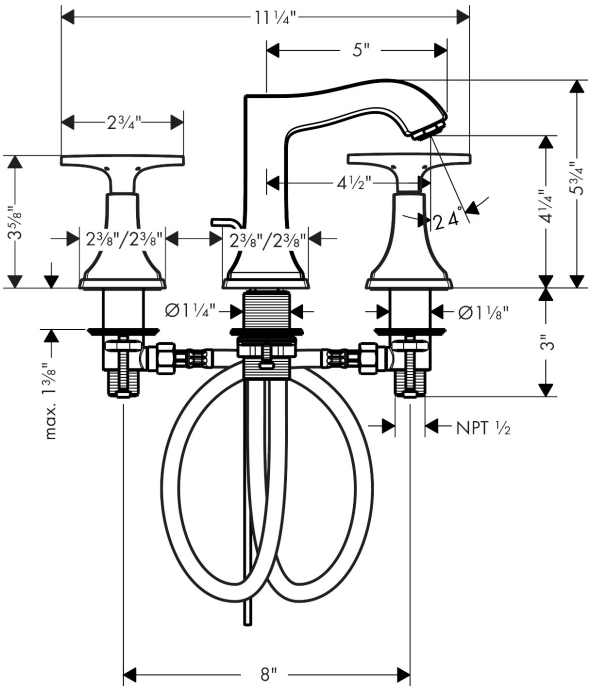

Technology

Quick Clean | Comfort Zone | Eco Right

Features

- Spray modes: Aerated spray
- Flow: 1.2 GPM (4.5 L/Min)
- 90° ceramic valves
- Includes pop-up drain

Certicates/approvals

UPC C ® | MAP | WaterSense Meets EPA Criteria Certified by IAPMO R&T | ADA