hansgrohe

Vernis Blend
Pressure Balance Tub/Shower Set, 1.5 GPM
Product Finish: **chrome** Part no. : **04957000**

Description

Features

- Consists of: Showerhead, Showerarm, Pressure Balance Trim, Tub spout
- Spray modes: Rain
- Ball-joint: Showerhead angle adjustable
- Flow rate of hand shower at 3 bar: 1.5 GPM (5.7 L/Min)

Item details

List Price	$ 563.00

Technology

EcoRight

XXL Performance

Compliance

WaterSense Meets EPA Criteria

UPC

Product image
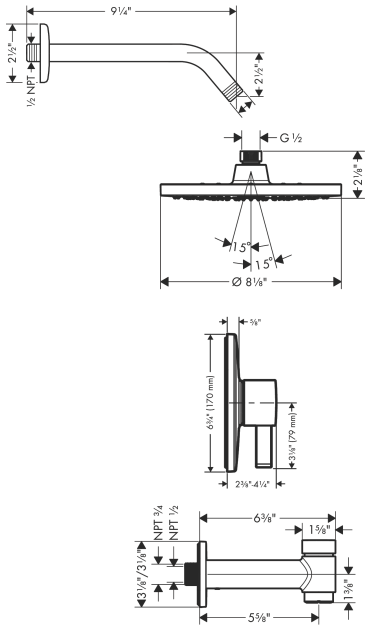
Scale drawing