AXOR

hansgrohe

Locarno
Widespread Faucet with Pop-Up Drain, 1.2 GPM
Finishes : **polished nickel** Part no. : **04813830**

Description

Features

- Consists of: Pop-up assembly
- handle variant: Lever
- Laminar spray
- Solid brass
- Flow: 1.2 GPM (4.5 L/Min)
- 90° ceramic valves
- Includes pop-up drain

Technology

Product image
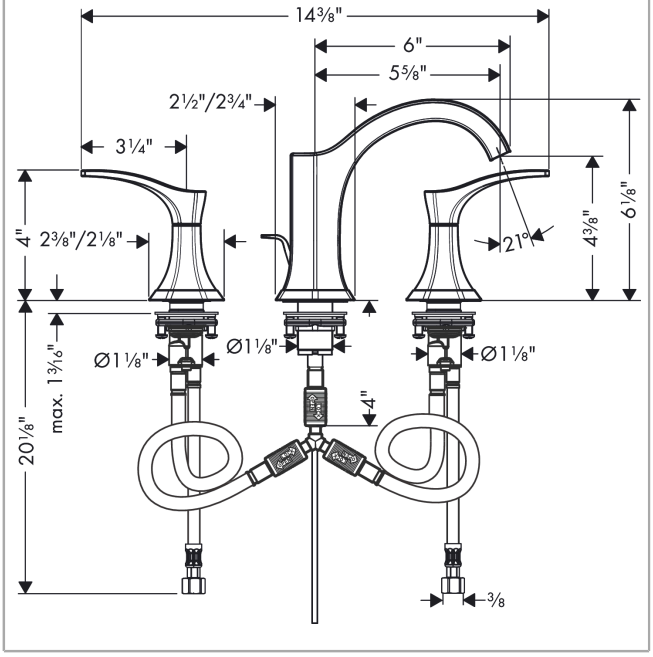
Scale drawing